Locating Bushings

for positioning clamping pins 12090 - press fit

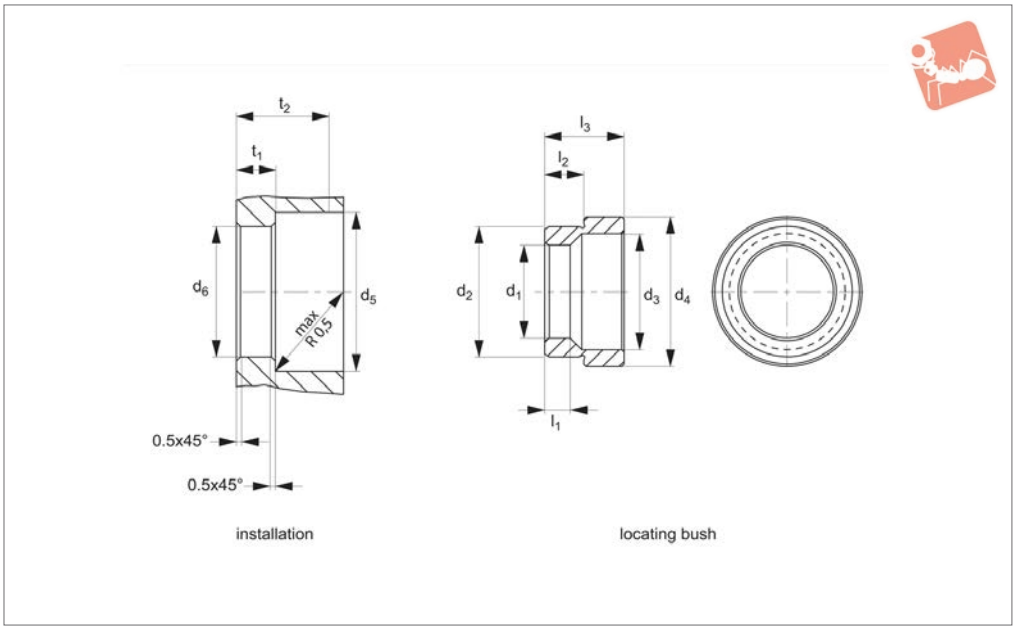

12093

Material

Steel version: steel, heat treated, tempered and blackened.
Stainless steel version: hardened stainless steel (AISI 440B, 1.4112).

Technical Notes

The press fit locating bush for positioning clamping pins are inserted in the machine table or the base plate with light pressure.

Order No.	Material	l_1	l_2	l_3	d_1 tol. F6	d_2 ±0.01	d_3	d_4	d_5 +1	d_6 tol. H7	t_1 ±0.025	t_2 min.	Weight g
12093.W0762	Steel	5.3	6.9	12.1	16	22	20	28.6	31	22	7.3	22	25
12093.W0764	Steel	5.3	8.4	17.1	20	28	25	32.2	34	28	8.8	22	40
12093.W0766	Steel	5.3	10.2	21.0	25	35	31	40.2	42	35	10.6	28	80
12093.W0768	Steel	5.3	10.6	21.8	30	42	37	48.2	50	42	11.0	28	115
12093.W0862	Stainless Steel	5.3	6.9	12.1	16	22	20	28.6	31	22	7.3	22	25
12093.W0864	Stainless Steel	5.3	8.4	17.1	20	28	25	32.2	34	28	8.8	22	40
12093.W0866	Stainless Steel	5.3	10.2	21.0	25	35	31	40.2	42	35	11.0	28	80
12093.W0868	Stainless Steel	5.3	10.6	21.8	30	42	37	48.2	50	42	11.0	28	115