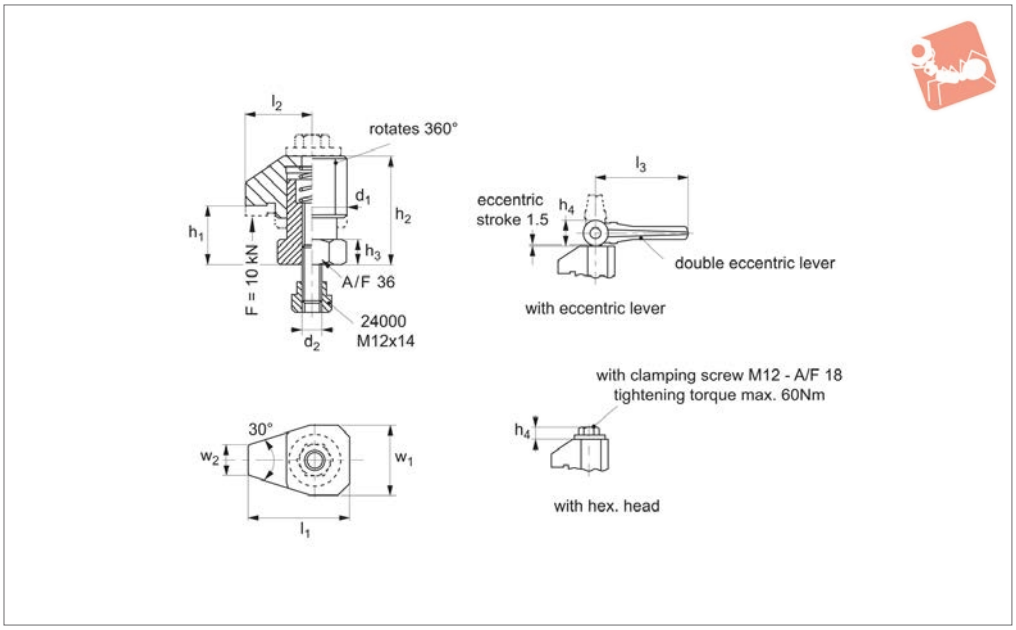

12602

Material
Steel case-hardened, blackened and ground.

Technical Notes
For heavy-duty clamping applications where space and height are limiting factors.

Tips
Often used for clamping of injection mould tools and the like.

T-nuts removable. For other T-nut sizes please refer to no. 24000.
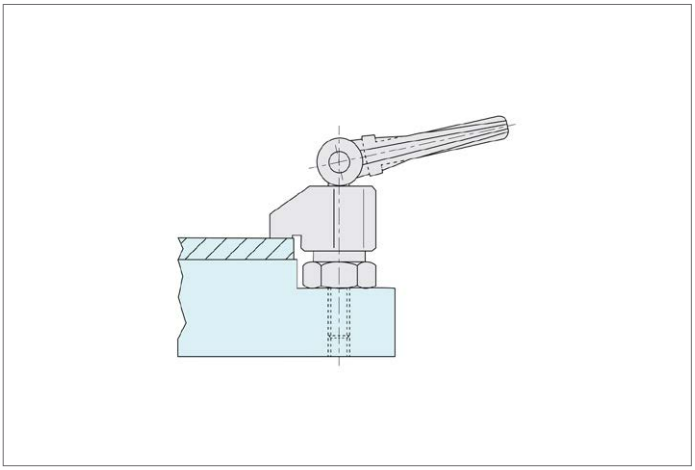
Order No.	Type	Clamping height h_1 min.	Clamping height h_1 max.	Stroke	d_1	d_2	w_1	w_2	h_2 min.	h_2 max.	h_3	h_4	l_1	l_2	l_3	Weight g
12602.W0034	With Eccentric Clamp Lever	25	30	5	44	M12	42	18	54	59	15	28	61	40	100	1022
12602.W0035	With Hex. Head Bolt	25	30	5	44	M12	42	18	54	59	15	13	61	40		708