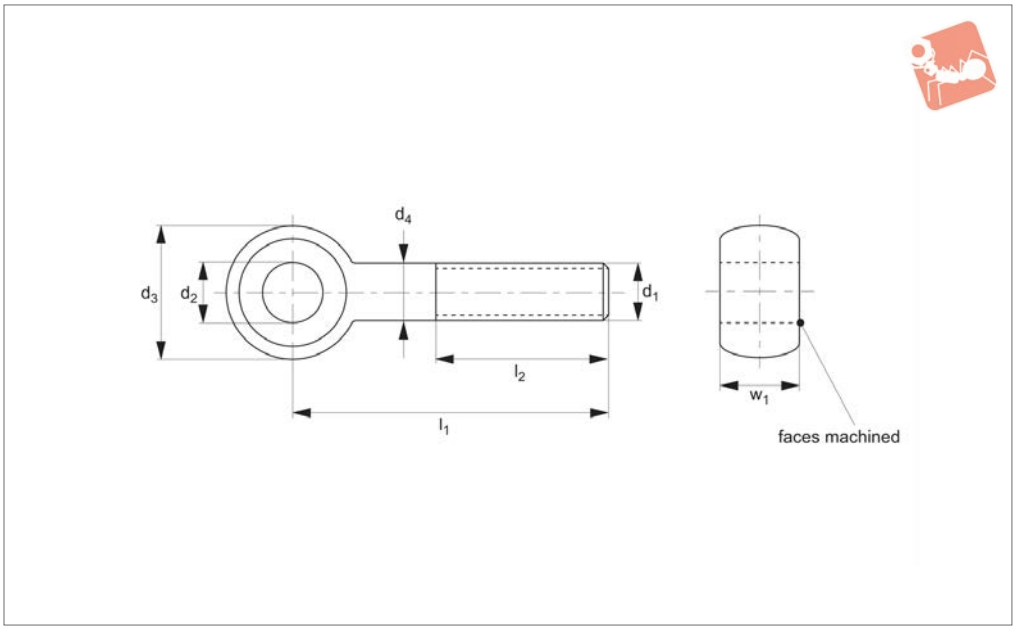

18820

Material
Steel, heat-treated steel, blackened, quality thread 8.8.
Rolled thread, shaft Ø = roll Ø, faces machined.

Technical Notes
Produced to DIN 444B.

Important Notes
These parts offer a high precision bore d_2 to tolerance H7, with faces ‚w_1' machined flat.

For similar DIN 444 swing bolts for a standard tolerance see our part 18822.

Order No.	d_1	l_1	d_2 tol. H7	d_3	l_2	d_4	w_1	Weight g
18820.W0060	M 5	50	5	12	32	5	6	10
18820.W0061	M 6	50	6	14	32	6	7	14
18820.W0062	M 6	75	6	14	32	6	7	19
18820.W0081	M 8	40	8	18	22	8	9	22
18820.W0084	M 8	60	8	18	22	8	9	28
18820.W0103	M10	50	10	20	26	10	12	38
18820.W0106	M10	75	10	20	26	10	12	50
18820.W0108	M10	100	10	20	26	10	12	62
18820.W0122	M12	60	12	25	30	12	14	70
18820.W0125	M12	80	12	25	30	12	14	84
18820.W0128	M12	120	12	25	30	12	14	113
18820.W0163	M16	80	16	32	38	16	17	153
18820.W0168	M16	150	16	32	44	16	17	245
18820.W0201	M20	100	18	40	63	20	22	305
18820.W0202	M20	130	18	40	63	20	22	370
18820.W0203	M20	160	18	40	63	20	22	440