Swivel Max. - Brass Base Element

modular coolant nozzle system - max. 6,7 bar

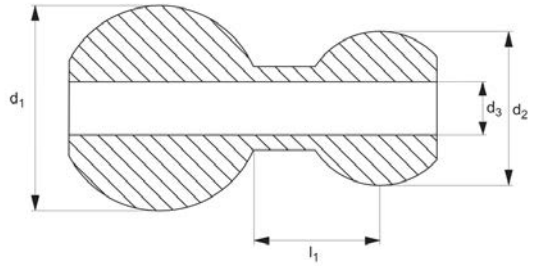

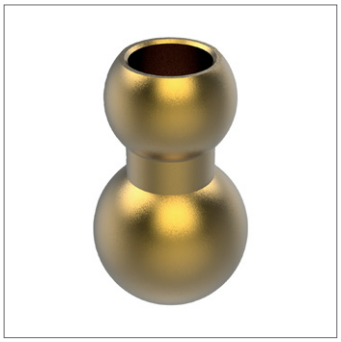

20051

Material
Brass.

Technical Notes
Max. temperature: 43°C.

Max. pressure: 6,7 bar.

Tips
For use with our Swivel Max. coolant nozzle system (20051 to 20059).

Order No.	d_1	d_2	d_3	l_1
20051.W0100	10	12	5	10.2
20051.W0120	12	12	5	10.2
20051.W0140	14	12	5	10.2
20051.W0150	15	12	5	10.2
20051.W0220	22	12	5	10.2
20051.W2500	1/2“	12	5	10.2
20051.W2630	5/8“	12	5	10.2

Horizontal Clamping

up to 2.2 tons

Clamping Torque

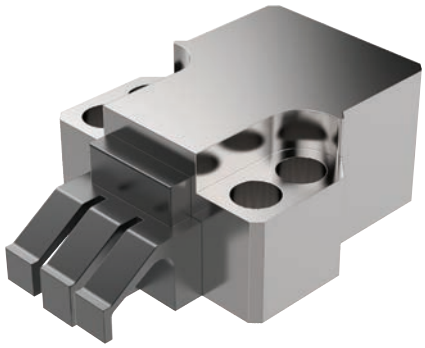

11040/CL2040

Clamping Torque N/m	Clamping Force N
50	23000
40	18000
30	12500
25	11500
20	9500

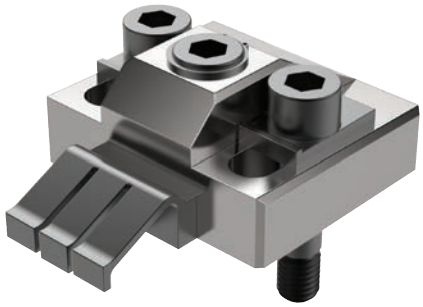

11070/CL2070

Clamping Torque N/m	Clamping Force N
60	16500
50	15000
40	12000
30	10000
25	8000
20	7000

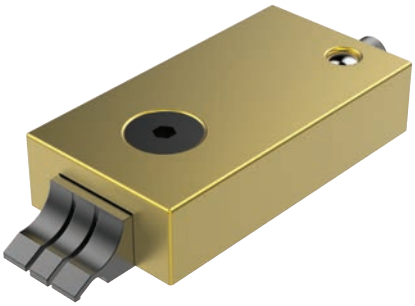

11081/CL2081

Clamping Torque N/m	Clamping Force N
5	6600
4.5	5500
4	4900

10940/CL0030

Clamping Torque N/m	Clamping Force N
8.5	4000
8	3800
7	3400
6	3000
5	2500
4	2000

System pressure (bar)	0.35	0.7	1.4	2.0	2.8	4.1	5.5
Orifice diameter (mm)			**Flow rate (litres/minute)**				
1.02	0.32	0.45	0.64	0.77	0.91	1.18	1.41
1.57	0.86	1.14	1.68	2	2.32	2.82	3.32
2.18	1.64	2.32	3.27	3.86	4.55	5.46	6.82
2.79	2.91	4.09	6.36	7.27	8.18	10	11.37
4.06	6.36	9.09	12.73	15.91	18.18	21.82	25.46
5.59	11.37	16.82	23.64	30.46	35.46	42.28	48.19

System pressure (bar)	6.9	10.3	13.8	20.7	34.5	69.0	103.5
Orifice diameter (mm)			**Flow rate (litres/minute)**				
1.02	1.59	1.86	2.09	2.77	4	5.46	6.36
1.57	3.64	4.55	5.46	6.82	9.55	13.64	17.28
2.18	7.73	9.09	10.46	12.73	16.82	23.64	28.64
2.79	14.09	16.37	18.64	23.64	29.55	40.46	49.55
4.06	28.19	34.55	41.37	49.1	63.65	90.01	110.47
5.59	53.64	65.46	75.01	89.1	114.56	161.39	197.75

What Flow Rate of Coolant is Required?

Choose a nozzle with an orifice size that matches your pump's capacity.

Select an orifice size too big and coolant pressure will drop off, an orifice size too small and an inadequate amount of coolant will reach the tool tip and can result in damage.

Note: Flow rates are based on water at 20°. Actual results may vary with fluid type, extension length and aiming angle.

Calculating Coolant Velocity

To calculate the average coolant exit velocity (important in some grinding operations where it is often desirable to match or exceed the peripheral velocity of the wheel) refer to the formula below. Choose an orifice size that produces sufficient back pressure to achieve the desired velocity.

$$V = \frac{(17.11 \times 10^{-5}) \times F}{(d \times 10^{-3})^2}$$

Where;

V = Velocity in m/s

C = Constant of 17.11×10^{-5}

F = Flow rate through orifice in litres/min (see table above)

d = Orifice diameter (mm) from product tables

Nozzle Extensions

Choose a nozzle extension that suits your application. Short projections are more compact and less likely to be knocked out of position by swarf or vibration. Longer extensions are easier to aim, produce a more streamline or laminar flow and shoot further.

A Word About Coolant Pumps

The most common coolant pump on CNC machine tools is a single stage centrifugal pump, normally designed to move high volumes of water at low pressure (typically 0.2 to 1.4 bar). Multi-stage centrifugal pumps are capable of higher pressures (typically 1.4 to 14 bar) while still producing high flow rates. Positive displacement pumps are used for very high pressure applications up to 140 bar and are generally used with small diameter orifices due to their lower flow rates.

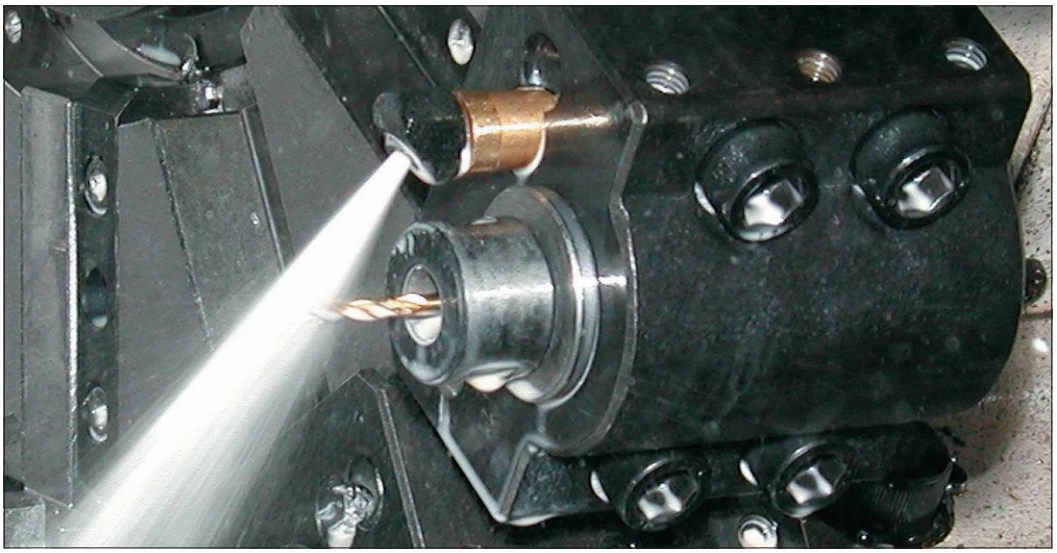

ov-W20000-A-T-W20114-A-T-b-rmh - Updated - 26-10-2022

Swival Max-Modular Coolant Nozzle System

An extremely versatile system with an incredible range of motion in each joint – 72˚ either side of centreline! It's compact design is ideal for tight spaces. Available with fixed or variable flow nozzles and interchangeable orifices rated to 6.7 bar maximum and available with threaded or spherical bases. Vibration resistant joints provide superior reliability in CNC lathe turrets where inertial forces are high.

Variations

Links swivel 72˚ either side of centreline enabling it to come full circle within a 45mm inscribed circle.

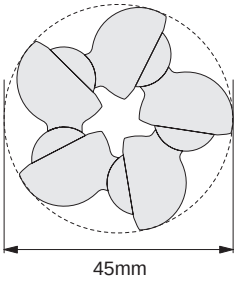

Applications

The Swival Max coolant nozzle system with fixed flow end nozzles is ideal for CNC lathes due to its compactness and flexibility.

Variable flow end nozzles enable infinite flow control from full shutoff to full flow with fingertip control. They are ideal for manual and CNC mills.

An extremely versatile coolant nozzle system compatible with new and existing installations.

Build your flexible system for your application.

Base

20051 - Brass Base Element
For plain bore and screw location.

OR

20052 - Acetal Base Element
For easy screw in fixing.

Intermediate Links for Maximum Extension and Reach

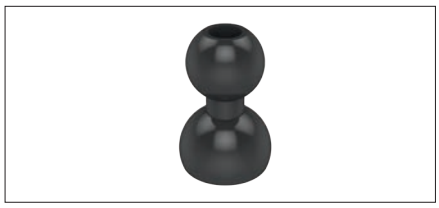

20053.W0010 - Standard Swivel Max Extension Links

OR

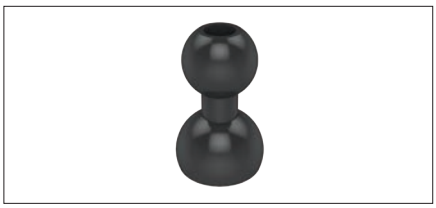

20053.W0120 - Connect from Swivel Max to LocLine.

OR

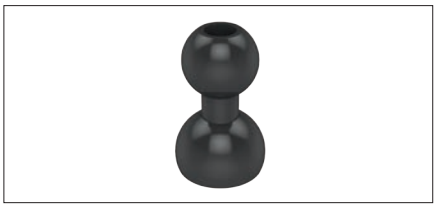

20053.W0130 - Connect from Swivel Max to SnapLoc.

Alternative Option

Alternatively, connect from either LocLine or SnapLoc to our in-expensive and versatile swivel Max System.

20053.W0140 - Connect from LocLine to Swivel Max

OR

20053.W0150 - Connect from SnapLoc to Swivel Max.

Wixroyd AN ESSENTRA COMPANY
0333 207 4497
sales@wixroyd.com