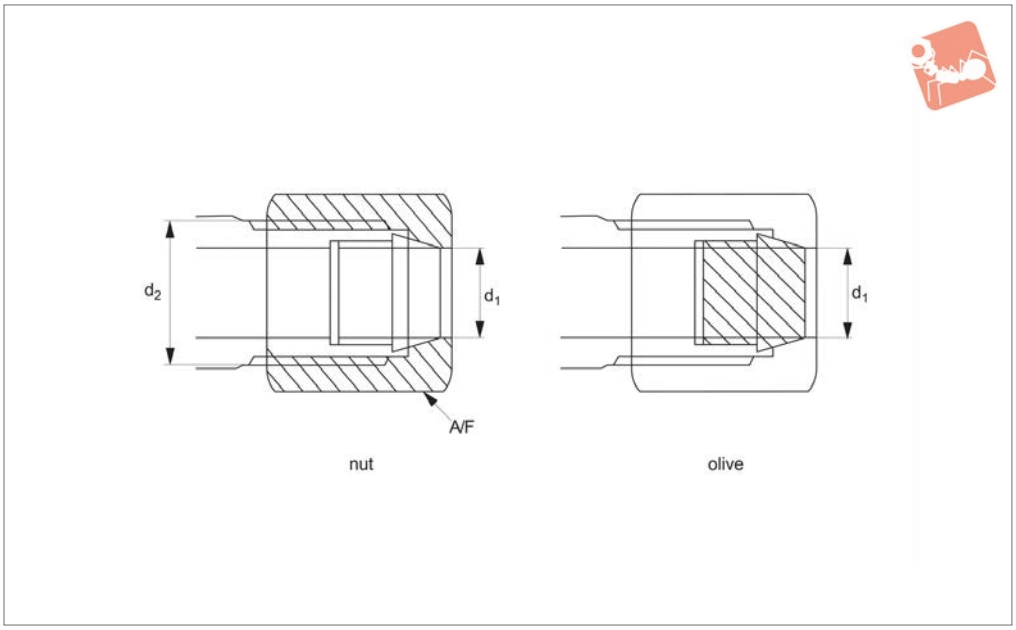

20097

Material
Brass.

Technical Notes
Max. temperature: 150°C.

Max. pressure: 33 bar.
For angled or straight connectors 20095 and 20096.

Order No.	Type	d_1	Internal thread d_2	A/F
20097.W1040	Nut	4.8	3/8“ - 24 UNF	7/16“
20097.W1060	Nut	6.4	7/16“ - 24 UNF	1/2“
20097.W1070	Nut	7.9	1/2“ - 24 UNF	9/16“
20097.W1090	Nut	9.5	9/16“ - 24 UNF	5/8“
20097.W2040	Olive	4.8	-	-
20097.W2060	Olive	6.4	-	-
20097.W2070	Olive	7.9	-	-
20097.W2090	Olive	9.5	-	-

Horizontal Clamping

up to 2.2 tons

Clamping Torque

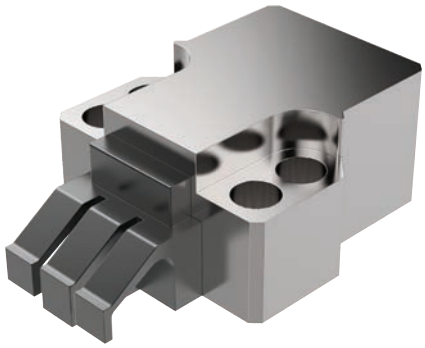

11040/CL2040

Clamping Torque N/m	Clamping Force N
50	23000
40	18000
30	12500
25	11500
20	9500

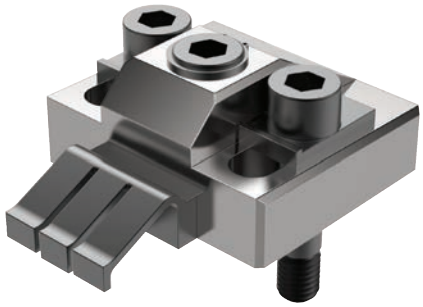

11070/CL2070

Clamping Torque N/m	Clamping Force N
60	16500
50	15000
40	12000
30	10000
25	8000
20	7000

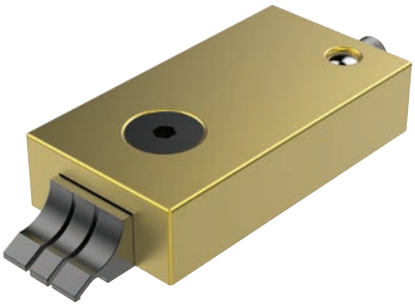

11081/CL2081

Clamping Torque N/m	Clamping Force N
5	6600
4.5	5500
4	4900

10940/CL0030

Clamping Torque N/m	Clamping Force N
8.5	4000
8	3800
7	3400
6	3000
5	2500
4	2000

System pressure (bar)	0.35	0.7	1.4	2.0	2.8	4.1	5.5
Orifice diameter (mm)			**Flow rate (litres/minute)**				
1.02	0.32	0.45	0.64	0.77	0.91	1.18	1.41
1.57	0.86	1.14	1.68	2	2.32	2.82	3.32
2.18	1.64	2.32	3.27	3.86	4.55	5.46	6.82
2.79	2.91	4.09	6.36	7.27	8.18	10	11.37
4.06	6.36	9.09	12.73	15.91	18.18	21.82	25.46
5.59	11.37	16.82	23.64	30.46	35.46	42.28	48.19

System pressure (bar)	6.9	10.3	13.8	20.7	34.5	69.0	103.5
Orifice diameter (mm)			**Flow rate (litres/minute)**				
1.02	1.59	1.86	2.09	2.77	4	5.46	6.36
1.57	3.64	4.55	5.46	6.82	9.55	13.64	17.28
2.18	7.73	9.09	10.46	12.73	16.82	23.64	28.64
2.79	14.09	16.37	18.64	23.64	29.55	40.46	49.55
4.06	28.19	34.55	41.37	49.1	63.65	90.01	110.47
5.59	53.64	65.46	75.01	89.1	114.56	161.39	197.75

What Flow Rate of Coolant is Required?

Choose a nozzle with an orifice size that matches your pump's capacity.

Select an orifice size too big and coolant pressure will drop off, an orifice size too small and an inadequate amount of coolant will reach the tool tip and can result in damage.

Note: Flow rates are based on water at 20°. Actual results may vary with fluid type, extension length and aiming angle.

Calculating Coolant Velocity

To calculate the average coolant exit velocity (important in some grinding operations where it is often desirable to match or exceed the peripheral velocity of the wheel) refer to the formula below. Choose an orifice size that produces sufficient back pressure to achieve the desired velocity.

$$V = \frac{(17.11 \times 10^{-5}) \times F}{(d \times 10^{-3})^2}$$

Where;

V = Velocity in m/s

C = Constant of 17.11×10^{-5}

F = Flow rate through orifice in litres/min (see table above)

d = Orifice diameter (mm) from product tables

Nozzle Extensions

Choose a nozzle extension that suits your application. Short projections are more compact and less likely to be knocked out of position by swarf or vibration. Longer extensions are easier to aim, produce a more streamline or laminar flow and shoot further.

A Word About Coolant Pumps

The most common coolant pump on CNC machine tools is a single stage centrifugal pump, normally designed to move high volumes of water at low pressure (typically 0.2 to 1.4 bar). Multi-stage centrifugal pumps are capable of higher pressures (typically 1.4 to 14 bar) while still producing high flow rates. Positive displacement pumps are used for very high pressure applications up to 140 bar and are generally used with small diameter orifices due to their lower flow rates.

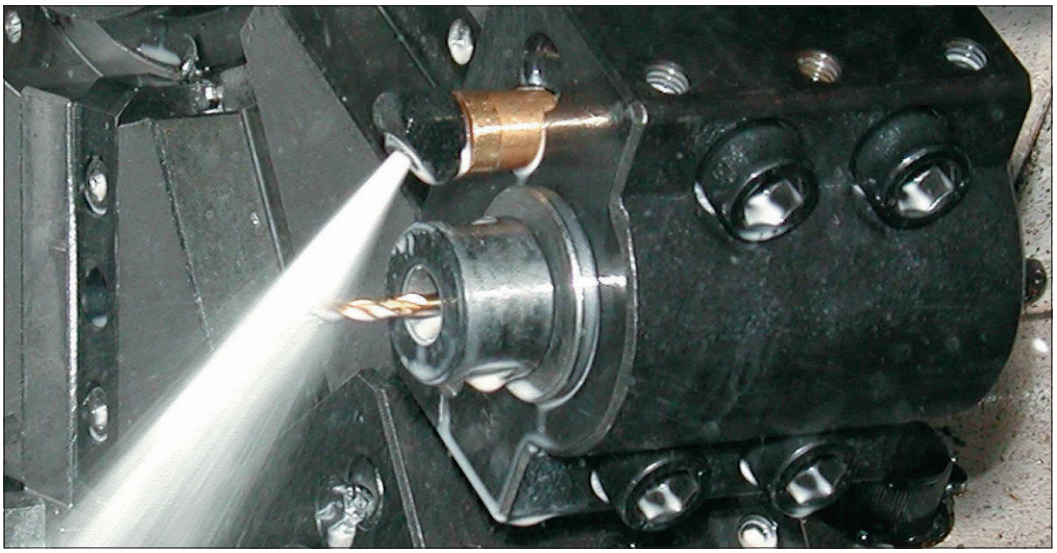

ov-W20000-A-T-W20114-A-T-b-rmh - Updated - 26-10-2022