Ball Lock Pins - Single Acting - Blue

self-locking - stainless steel 1.4305 (AISI 303)

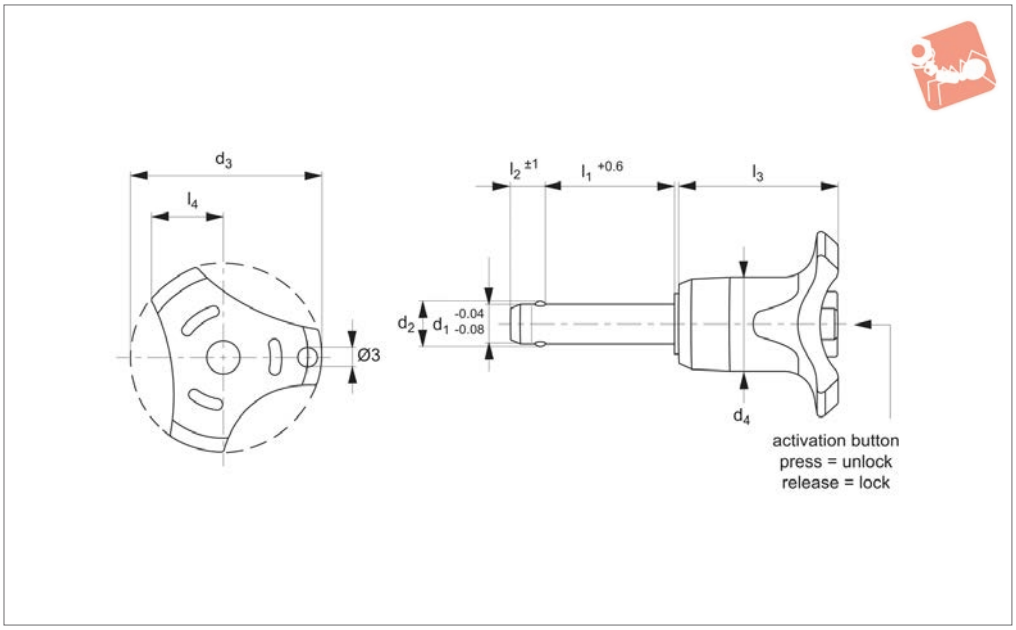

33080.BU

Material

Pin: stainless steel 1.4542 (AISI 630)
Ball: stainless steel 1.3541
Spring: stainless steel.
Handle: thermoplastic PA 6.
Available colours: grey/orange, grey/blue, grey/grey.

Technical Notes

Pressing = unlocking.
Releasing = locking.
Temperature resistance -30°C to +80°C.
For quick fastening and locking of frequently repeated connections.

Tips

For lanyards & retaining cables see part no.33250-33261. Easy install locating bushes available see part no.33248 + 33246.

Important Notes

*Shearing resistance similar to DIN 50141. Also available in stainless grade 1.4542 (AISI 630) for higher shear forces, see part no.33060.

Order No.	d_1	l_1	d_2	d_3	d_4	l_2	l_3	l_4	Loc'n hole tol. H11	Shearing resistance, double kN min.	Weight g
33080.W0432	5	10	5.5	33.2	14.5	6.0	26.7	10.8	5	14	15
33080.W0433	5	15	5.5	33.2	14.5	6.0	26.7	10.8	5	14	15
33080.W0434	5	20	5.5	33.2	14.5	6.0	26.7	10.8	5	14	16
33080.W0435	5	25	5.5	33.2	14.5	6.0	26.7	10.8	5	14	17
33080.W0436	5	30	5.5	33.2	14.5	6.0	26.7	10.8	5	14	18
33080.W0437	6	60	7.0	33.2	14.5	7.0	26.7	10.8	6	21	26
33080.W0438	6	70	7.0	33.2	14.5	7.0	26.7	10.8	6	21	28
33080.W0439	6	80	7.0	33.2	14.5	7.0	26.7	10.8	6	21	30
33080.W0425	5	35	5.5	33.2	14.5	6.0	26.7	10.8	5	14	19
33080.W0426	5	40	5.5	33.2	14.5	6.0	26.7	10.8	5	14	20
33080.W0427	5	45	5.5	33.2	14.5	6.0	26.7	10.8	5	14	21
33080.W0428	5	50	5.5	33.2	14.5	6.0	26.7	10.8	5	14	23
33080.W0429	5	60	5.5	33.2	14.5	6.0	26.7	10.8	5	14	24
33080.W0430	5	70	5.5	33.2	14.5	6.0	26.7	10.8	5	14	18
33080.W0431	5	80	5.5	33.2	14.5	6.0	26.7	10.8	5	14	19
33080.W0442	6	10	7.0	33.2	14.5	7.0	26.7	10.8	6	21	16
33080.W0443	6	15	7.0	33.2	14.5	7.0	26.7	10.8	6	21	17
33080.W0444	6	20	7.0	33.2	14.5	7.0	26.7	10.8	6	21	18
33080.W0445	6	25	7.0	33.2	14.5	7.0	26.7	10.8	6	21	19
33080.W0446	6	30	7.0	33.2	14.5	7.0	26.7	10.8	6	21	20
33080.W0447	6	35	7.0	33.2	14.5	7.0	26.7	10.8	6	21	21
33080.W0448	6	40	7.0	33.2	14.5	7.0	26.7	10.8	6	21	22
33080.W0449	6	45	7.0	33.2	14.5	7.0	26.7	10.8	6	21	23
33080.W0450	6	50	7.0	33.2	14.5	7.0	26.7	10.8	6	21	24
33080.W0452	8	10	9.6	39.2	18.4	8.2	33.3	13.4	8	38	38
33080.W0453	8	15	9.6	39.2	18.4	8.2	33.3	13.4	8	38	58
33080.W0454	8	20	9.6	39.2	19.3	8.2	33.3	13.4	8	38	40

Ball Lock Pins - Single Acting - Blue

self-locking - stainless steel 1.4305 (AISI 303)

Order No.	d_1	l_1	d_2	d_3	d_4	l_2	l_3	l_4	Loc'n hole tol. H11	Shearing resistance, double kN min.	Weight g
33080.W0455	8	25	9.6	39.2	19.3	8.2	33.3	13.4	8	38	42
33080.W0456	8	30	9.6	39.2	19.3	8.2	33.3	13.4	8	38	44
33080.W0457	8	35	9.6	39.2	19.3	8.2	33.3	13.4	8	38	46
33080.W0458	8	40	9.6	39.2	19.3	8.2	33.3	13.4	8	38	47
33080.W0459	8	45	9.6	39.2	19.3	8.2	33.3	13.4	8	38	49
33080.W0460	8	50	9.6	39.2	19.3	8.2	33.3	13.4	8	38	51
33080.W0461	8	60	9.6	39.2	18.4	8.2	33.3	13.4	8	38	62
33080.W0462	8	70	9.6	39.2	18.4	8.2	33.3	13.4	8	38	65
33080.W0463	8	80	9.6	39.2	18.4	8.2	33.3	13.4	8	38	69
33080.W0451	8	90	9.6	39.2	18.4	8.2	33.3	13.4	8	38	36
33080.W0441	8	100	9.6	39.2	18.4	8.2	33.3	13.4	8	38	54
33080.W0464	10	20	12.0	39.2	19.3	9.6	33.3	13.4	10	60	47
33080.W0465	10	25	12.0	39.2	19.3	9.6	33.3	13.4	10	60	49
33080.W0466	10	30	12.0	39.2	19.3	9.6	33.3	13.4	10	60	53
33080.W0467	10	35	12.0	39.2	19.3	9.6	33.3	13.4	10	60	55
33080.W0468	10	40	12.0	39.2	19.3	9.6	33.3	13.4	10	60	58
33080.W0469	10	45	12.0	39.2	19.3	9.6	33.3	13.4	10	60	61
33080.W0470	10	50	12.0	39.2	19.3	9.6	33.3	13.4	10	60	64
33080.W0471	10	15	12.0	39.2	18.4	9.6	33.3	13.4	10	60	86
33080.W0473	10	70	12.0	39.2	18.4	9.6	33.3	13.4	10	60	91
33080.W0474	10	80	12.0	39.2	18.4	9.6	33.3	13.4	10	60	97
33080.W0475	10	90	12.0	39.2	18.4	9.6	33.3	13.4	10	60	103
33080.W0476	10	100	12.0	39.2	18.4	9.6	33.3	13.4	10	60	109
33080.W0477	10	110	12.0	39.2	18.4	9.6	33.3	13.4	10	60	115
33080.W0478	10	120	12.0	39.2	18.4	9.6	33.3	13.4	10	60	53
33080.W0484	12	20	14.5	47.0	25.2	10.6	39.7	16.7	12	87	156
33080.W0472	10	60	12.0	39.2	19.3	9.6	33.3	13.4	10	60	70
33080.W0485	12	25	14.5	47.6	26.3	10.6	39.7	16.7	12	87	96
33080.W0486	12	30	14.5	47.6	26.3	10.6	39.7	16.7	12	87	100
33080.W0487	12	35	14.5	47.6	26.3	10.6	39.7	16.7	12	87	105
33080.W0488	12	40	14.5	47.6	26.3	10.6	39.7	16.7	12	87	109
33080.W0489	12	45	14.5	47.6	26.3	10.6	39.7	16.7	12	87	113
33080.W0490	12	50	14.5	47.6	26.3	10.6	39.7	16.7	12	87	117
33080.W0492	12	60	14.5	47.6	26.3	10.6	39.7	16.7	12	87	126
33080.W0494	12	70	14.5	47.6	26.3	10.6	39.7	16.7	12	87	134
33080.W0496	12	80	14.5	47.6	26.3	10.6	39.7	16.7	12	87	143
33080.W0497	12	90	14.5	47.6	25.2	10.6	39.7	16.7	12	87	165
33080.W0498	12	100	14.5	47.6	25.2	10.6	39.7	16.7	12	87	173
33080.W0499	12	110	14.5	47.6	25.2	10.6	39.7	16.7	12	87	182
33080.W0500	12	120	14.5	47.6	25.2	10.6	39.7	16.7	12	87	96
33080.W0506	16	30	19.0	47.6	26.3	14.0	39.7	16.7	16	155	132
33080.W0507	16	35	19.0	47.6	26.3	14.0	39.7	16.7	16	155	140
33080.W0508	16	40	19.0	47.6	26.3	14.0	39.7	16.7	16	155	148
33080.W0509	16	45	19.0	47.6	26.3	14.0	39.7	16.7	16	155	155
33080.W0510	16	50	19.0	47.6	26.3	14.0	39.7	16.7	16	155	168
33080.W0512	16	60	19.0	47.6	26.3	14.0	39.7	16.7	16	155	178
33080.W0514	16	70	19.0	47.6	26.3	14.0	39.7	16.7	16	155	194
33080.W0516	16	80	19.0	47.6	26.3	14.0	39.7	16.7	16	155	208
33080.W0517	16	90	19.0	47.6	25.2	14.0	39.7	16.7	16	155	234
33080.W0518	16	100	19.0	47.6	25.2	14.0	39.7	16.7	16	155	251
33080.W0519	16	110	19.0	47.6	25.2	14.0	39.7	16.7	16	155	266
33080.W0520	16	120	19.0	47.6	25.2	14.0	39.7	16.7	16	155	281
33080.W0521	16	130	19.0	47.6	25.2	14.0	39.7	16.7	16	155	297
33080.W0522	16	140	19.0	47.6	25.2	14.0	39.7	16.7	16	155	313
33080.W0523	16	150	19.0	47.6	25.2	14.0	39.7	16.7	16	155	328
33080.W0531	20	50	25.0	57.1	33.8	20.5	50.7	21.5	20	244	329
33080.W0533	20	70	25.0	57.1	33.8	20.5	50.7	21.5	20	244	377
33080.W0537	20	90	25.0	57.1	33.8	20.5	50.7	21.5	20	244	426
33080.W0532	20	60	25.0	57.1	35.4	20.5	50.7	21.5	20	244	343
33080.W0536	20	80	25.0	57.1	35.4	20.5	50.7	21.5	20	244	392
33080.W0540	20	100	25.0	57.1	35.4	20.5	50.7	21.5	20	244	440
33080.W0544	20	120	25.0	57.1	35.4	20.5	50.7	21.5	20	244	488
33080.W0545	20	130	25.0	57.1	33.8	20.5	50.7	21.5	20	244	523
33080.W0546	20	140	25.0	57.1	33.8	20.5	50.7	21.5	20	244	546
33080.W0547	20	150	25.0	57.1	33.8	20.5	50.7	21.5	20	244	571
33080.W0549	25	50	30.8	57.1	33.8	22.0	50.7	21.5	25	386	415
33080.W0550	25	60	30.8	57.1	33.8	22.0	50.7	21.5	25	386	453

Ball Lock Pins - Single Acting - Blue

self-locking - stainless steel 1.4305 (AISI 303)

Order No.	d_1	l_1	d_2	d_3	d_4	l_2	l_3	l_4	Loc'n hole tol. H11	Shearing resistance, double kN min.	Weight g
33080.W0551	25	70	30.8	57.1	33.8	22.0	50.7	21.5	25	386	490
33080.W0552	25	80	30.8	57.1	33.8	22.0	50.7	21.5	25	386	528
33080.W0553	25	90	30.8	57.1	33.8	22.0	50.7	21.5	25	386	565
33080.W0554	25	100	30.8	57.1	33.8	22.0	50.7	21.5	25	386	603
33080.W0556	25	120	30.8	57.1	33.8	22.0	50.7	21.5	25	386	690
33080.W0557	25	130	30.8	57.1	33.8	22.0	50.7	21.5	25	386	715
33080.W0558	25	140	30.8	57.1	33.8	22.0	50.7	21.5	25	386	753
33080.W0559	25	150	30.8	57.1	33.8	22.0	50.7	21.5	25	386	790

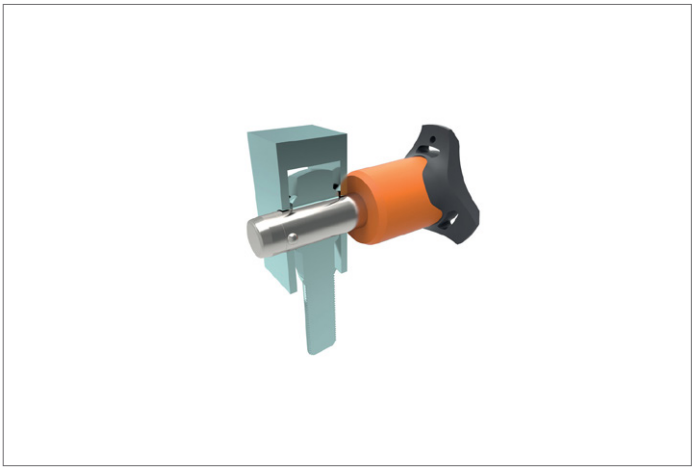

Wixroyd Ball Lock Pins

applications

Sound Rigging Systems

Ball lock pins on a sound rigging system. Offering secure fixing with high shear forces and easy fitting for operators at heights.

In addition full black powder coating of grip and actuation button eliminates glare from other stage lighting.

Gym Equipment

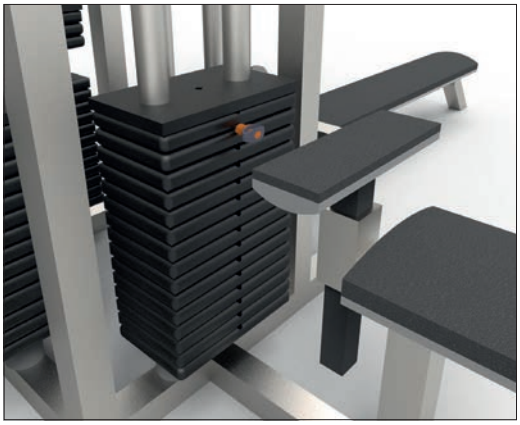

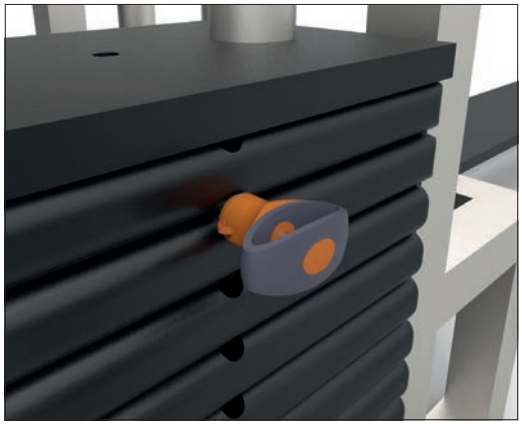

Scientific and Medical

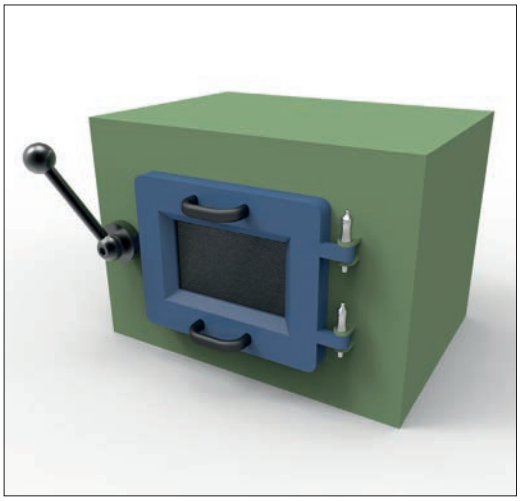

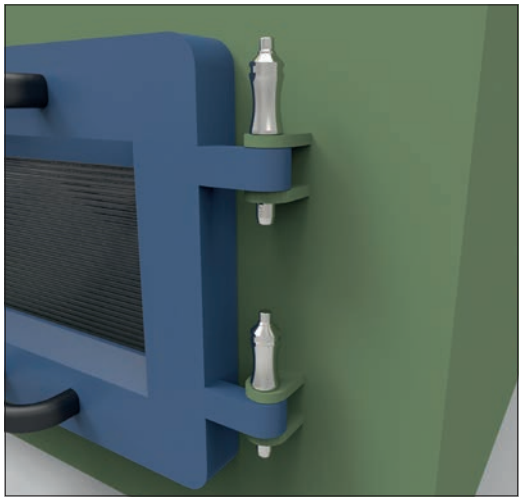

ov-W33060.BK-A-TQR1706-W33250-A-TLA1066-a-Inh - Updated - 27-10-2022

Pin Material

1.4305 (AISI 303) - shear force approx. 60% of higher material version 1.4542

1.4542 (AISI 630) - identified by the ridge on the pin

CRES 17-4PH (AMS 5643) aviation standard

Handle Style

Plastic tri-star

T-handled, metal

L-handled, metal

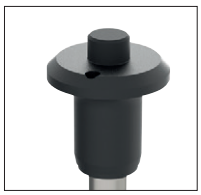

Mushroom, metal

Single piece metal, contoured

Special plastic self-spring

Adjustable grip length, plastic

Key ring

Safety, metal

Mushroom Type B aviation

Type R aviation

Lanyards and Locating Bushes

Stainless wire - (coated) - 2 x key ring

Stainless wire - Key ring and fixing loop

Plastic - 2 x cable tie

Steel wire - (coated) - 2 x key ring

Stainless bead chain - 2 x key ring

Locating bushes

Actuation

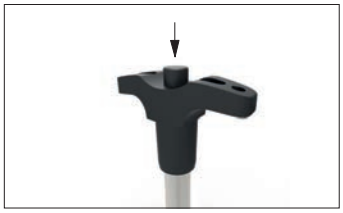

Press = unlock
Release = lock
(standard)

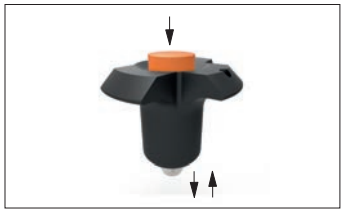

Press = unlock and position
Release = lock and simultaneous clamp

Simple spring loaded balls "pullout pin"

Important Note

Important Note: Ball lock pins are not suited to lifting applications!

For quick release lifting pins, see part 33400.

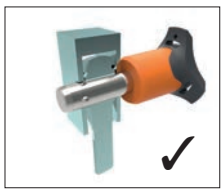

Shear force

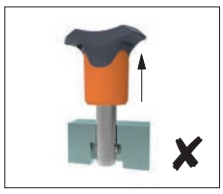

Lifting force

Special Variations

Variations on our standard designs are possible, please contact our sales team for technical assistance. Quick production on specials can be as little as 3 weeks.

ov-W33060.BK-A-TQR1706-W33250-A-TLA1066-b-rnh - Updated - 27-10-2022

Wixroyd Ball Lock Pins

Applications

- Positioning.
- Lifting.
- Locking.
- Indexing.
- Joining.

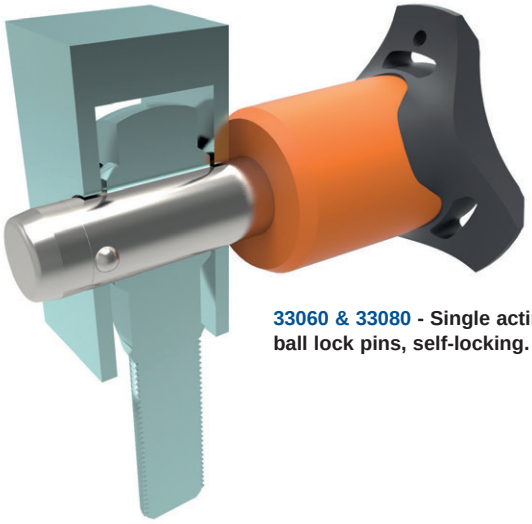

33060 & 33080 - Single acting ball lock pins, self-locking.

33194 - Single acting ball lock pins, self locking, simple finish.

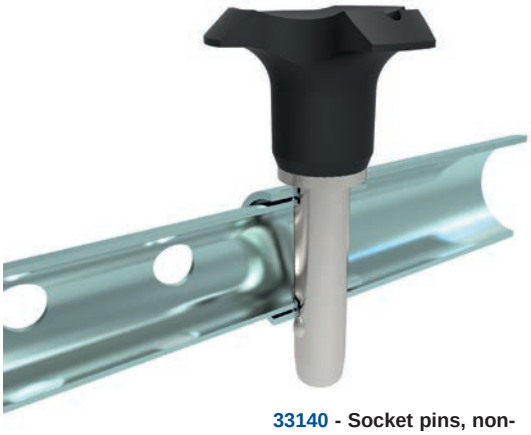

33140 - Socket pins, non-locking, spring loaded balls.

33100 - Single acting ball lock pin, self locking.

33180 - Clamping pins, with span compensation, self-locking.

33220 - Ball lock pins, single acting - L-handle

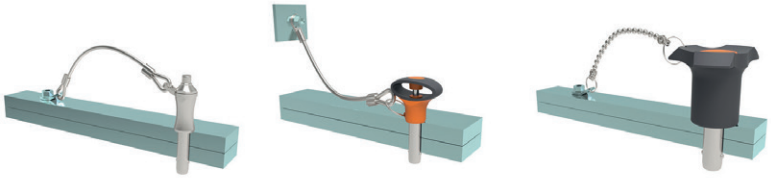

33250 & 33270 - Lanyards.

Wixroyd AN ESSENTRA COMPANY

wixroyd.com

ov-W33060.BK-A-TQR1706-W33250-A-TLA1066-c-Inh - Updated - 27-10-2022