Ball Lock Pins - Single Acting - Grey

self-locking - stainless steel 1.4305 (AISI 303)

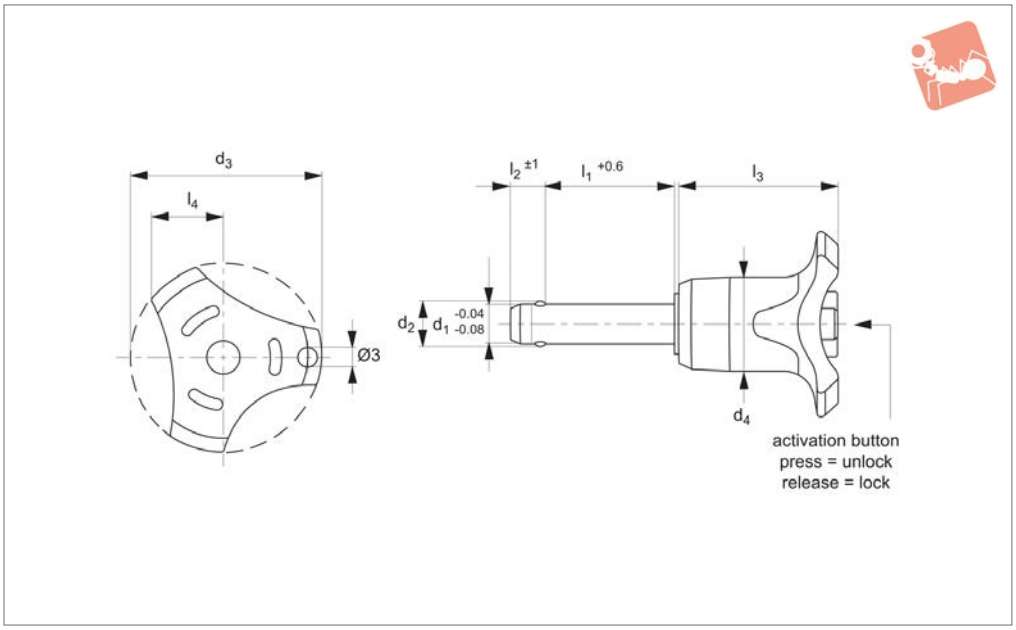

33080.GR

Material

Pin: stainless steel 1.4542 (AISI 630)
Ball: stainless steel 1.3541
Spring: stainless steel.
Handle: thermoplastic PA 6.
Available colours: grey/orange, grey/blue, grey/grey.

Technical Notes

Pressing = unlocking.
Releasing = locking.
Temperature resistance -30°C to +80°C.
For quick fastening and locking of frequently repeated connections.

Tips

For lanyards & retaining cables see part no.33250-33261. Easy install locating bushes available see part no.33248 + 33246.

Important Notes

*Shearing resistance similar to DIN 50141. Also available in stainless grade 1.4542 (AISI 630) for higher shear forces, see part no.33060.

Order No.	d_1	l_1	d_2	d_3	d_4	l_2	l_3	l_4	Loc'n hole tol. H11	Shearing resistance, double kN min.	Weight g
33080.W0292	5	10	5.5	33.2	14.5	6.0	26.7	10.8	5	14	15
33080.W0293	5	15	5.5	33.2	14.5	6.0	26.7	10.8	5	14	15
33080.W0294	5	20	5.5	33.2	14.5	6.0	26.7	10.8	5	14	16
33080.W0295	5	25	5.5	33.2	14.5	6.0	26.7	10.8	5	14	17
33080.W0296	5	30	5.5	33.2	14.5	6.0	26.7	10.8	5	14	18
33080.W0297	6	60	7.0	33.2	14.5	7.0	26.7	10.8	6	21	26
33080.W0298	6	70	7.0	33.2	14.5	7.0	26.7	10.8	6	21	28
33080.W0299	6	80	7.0	33.2	14.5	7.0	26.7	10.8	6	21	30
33080.W0285	5	35	5.5	33.2	14.5	6.0	26.7	10.8	5	14	19
33080.W0286	5	40	5.5	33.2	14.5	6.0	26.7	10.8	5	14	20
33080.W0287	5	45	5.5	33.2	14.5	6.0	26.7	10.8	5	14	21
33080.W0288	5	50	5.5	33.2	14.5	6.0	26.7	10.8	5	14	23
33080.W0289	5	60	5.5	33.2	14.5	6.0	26.7	10.8	5	14	24
33080.W0290	5	70	5.5	33.2	14.5	6.0	26.7	10.8	5	14	18
33080.W0291	5	80	5.5	33.2	14.5	6.0	26.7	10.8	5	14	19
33080.W0302	6	10	7.0	33.2	14.5	7.0	26.7	10.8	6	21	16
33080.W0301	8	100	9.6	39.2	18.4	8.2	33.3	13.4	8	38	54
33080.W0303	6	15	7.0	33.2	14.5	7.0	26.7	10.8	6	21	17
33080.W0304	6	20	7.0	33.2	14.5	7.0	26.7	10.8	6	21	18
33080.W0305	6	25	7.0	33.2	14.5	7.0	26.7	10.8	6	21	19
33080.W0306	6	30	7.0	33.2	14.5	7.0	26.7	10.8	6	21	20
33080.W0307	6	35	7.0	33.2	14.5	7.0	26.7	10.8	6	21	21
33080.W0308	6	40	7.0	33.2	14.5	7.0	26.7	10.8	6	21	22
33080.W0309	6	45	7.0	33.2	14.5	7.0	26.7	10.8	6	21	23
33080.W0310	6	50	7.0	33.2	14.5	7.0	26.7	10.8	6	21	24
33080.W0311	8	90	9.6	39.2	18.4	8.2	33.3	13.4	8	38	36
33080.W0312	8	10	9.6	39.2	18.4	8.2	33.3	13.4	8	38	38

Ball Lock Pins - Single Acting - Grey

self-locking - stainless steel 1.4305 (AISI 303)

Order No.	d_1	l_1	d_2	d_3	d_4	l_2	l_3	l_4	Loc'n hole tol. H11	Shearing resistance, double kN min.	Weight g
33080.W0313	8	15	9.6	39.2	18.4	8.2	33.3	13.4	8	38	58
33080.W0314	8	20	9.6	39.2	19.3	8.2	33.3	13.4	8	38	40
33080.W0315	8	25	9.6	39.2	19.3	8.2	33.3	13.4	8	38	42
33080.W0316	8	30	9.6	39.2	19.3	8.2	33.3	13.4	8	38	44
33080.W0317	8	35	9.6	39.2	19.3	8.2	33.3	13.4	8	38	46
33080.W0318	8	40	9.6	39.2	19.3	8.2	33.3	13.4	8	38	47
33080.W0319	8	45	9.6	39.2	19.3	8.2	33.3	13.4	8	38	49
33080.W0320	8	50	9.6	39.2	19.3	8.2	33.3	13.4	8	38	51
33080.W0321	8	60	9.6	39.2	18.4	8.2	33.3	13.4	8	38	62
33080.W0322	8	70	9.6	39.2	18.4	8.2	33.3	13.4	8	38	65
33080.W0323	8	80	9.6	39.2	18.4	8.2	33.3	13.4	8	38	69
33080.W0324	10	20	12.0	39.2	19.3	9.6	33.3	13.4	10	60	47
33080.W0325	10	25	12.0	39.2	19.3	9.6	33.3	13.4	10	60	49
33080.W0326	10	30	12.0	39.2	19.3	9.6	33.3	13.4	10	60	53
33080.W0327	10	35	12.0	39.2	19.3	9.6	33.3	13.4	10	60	55
33080.W0328	10	40	12.0	39.2	19.3	9.6	33.3	13.4	10	60	58
33080.W0329	10	45	12.0	39.2	19.3	9.6	33.3	13.4	10	60	61
33080.W0330	10	50	12.0	39.2	19.3	9.6	33.3	13.4	10	60	64
33080.W0331	10	15	12.0	39.2	18.4	9.6	33.3	13.4	10	60	86
33080.W0332	10	60	12.0	39.2	19.3	9.6	33.3	13.4	10	60	70
33080.W0333	10	70	12.0	39.2	18.4	9.6	33.3	13.4	10	60	91
33080.W0334	10	80	12.0	39.2	18.4	9.6	33.3	13.4	10	60	97
33080.W0335	10	90	12.0	39.2	18.4	9.6	33.3	13.4	10	60	103
33080.W0336	10	100	12.0	39.2	18.4	9.6	33.3	13.4	10	60	109
33080.W0337	10	110	12.0	39.2	18.4	9.6	33.3	13.4	10	60	115
33080.W0338	10	120	12.0	39.2	18.4	9.6	33.3	13.4	10	60	53
33080.W0344	12	20	14.5	47.6	25.2	10.6	39.7	16.7	12	87	156
33080.W0345	12	25	14.5	47.6	26.3	10.6	39.7	16.7	12	87	96
33080.W0346	12	30	14.5	47.6	26.3	10.6	39.7	16.7	12	87	100
33080.W0347	12	35	14.5	47.6	26.3	10.6	39.7	16.7	12	87	105
33080.W0348	12	40	14.5	47.6	26.3	10.6	39.7	16.7	12	87	109
33080.W0349	12	45	14.5	47.6	26.3	10.6	39.7	16.7	12	87	113
33080.W0350	12	50	14.5	47.6	26.3	10.6	39.7	16.7	12	87	117
33080.W0352	12	60	14.5	47.6	26.3	10.6	39.7	16.7	12	87	126
33080.W0354	12	70	14.5	47.6	26.3	10.6	39.7	16.7	12	87	134
33080.W0356	12	80	14.5	47.6	26.3	10.6	39.7	16.7	12	87	143
33080.W0357	12	90	14.5	47.6	25.2	10.6	39.7	16.7	12	87	165
33080.W0358	12	100	14.5	47.6	25.2	10.6	39.7	16.7	12	87	173
33080.W0359	12	110	14.5	47.6	25.2	10.6	39.7	16.7	12	87	182
33080.W0360	12	120	14.5	47.6	25.2	10.6	39.7	16.7	12	87	96
33080.W0366	16	30	19.0	47.6	26.3	14.0	39.7	16.7	16	155	132
33080.W0367	16	35	19.0	47.6	26.3	14.0	39.7	16.7	16	155	140
33080.W0368	16	40	19.0	47.6	26.3	14.0	39.7	16.7	16	155	148
33080.W0369	16	45	19.0	47.6	26.3	14.0	39.7	16.7	16	155	155
33080.W0370	16	50	19.0	47.6	26.3	14.0	39.7	16.7	16	155	168
33080.W0372	16	60	19.0	47.6	26.3	14.0	39.7	16.7	16	155	178
33080.W0374	16	70	19.0	47.6	26.3	14.0	39.7	16.7	16	155	194
33080.W0376	16	80	19.0	47.6	26.3	14.0	39.7	16.7	16	155	208
33080.W0377	16	90	19.0	47.6	25.2	14.0	39.7	16.7	16	155	234
33080.W0378	16	100	19.0	47.6	25.2	14.0	39.7	16.7	16	155	251
33080.W0379	16	110	19.0	47.6	25.2	14.0	39.7	16.7	16	155	266
33080.W0380	16	120	19.0	47.6	25.2	14.0	39.7	16.7	16	155	281
33080.W0381	16	130	19.0	47.6	25.2	14.0	39.7	16.7	16	155	297
33080.W0382	16	140	19.0	47.6	25.2	14.0	39.7	16.7	16	155	313
33080.W0383	16	150	19.0	47.6	25.2	14.0	39.7	16.7	16	155	328
33080.W0391	20	50	25.0	57.1	33.8	20.5	50.7	21.5	20	244	329
33080.W0392	20	60	25.0	57.1	35.4	20.5	50.7	21.5	20	244	343
33080.W0393	20	70	25.0	57.1	33.8	20.5	50.7	21.5	20	244	377
33080.W0397	20	90	25.0	57.1	33.8	20.5	50.7	21.5	20	244	426
33080.W0401	20	110	25.0	57.1	33.8	20.5	50.7	21.5	20	244	474
33080.W0396	20	80	25.0	57.1	35.4	20.5	50.7	21.5	20	244	392
33080.W0400	20	100	25.0	57.1	35.4	20.5	50.7	21.5	20	244	440
33080.W0404	20	120	25.0	57.1	33.8	20.5	50.7	21.5	20	244	488
33080.W0406	20	130	25.0	57.1	33.8	20.5	50.7	21.5	20	244	523
33080.W0407	20	150	25.0	57.1	33.8	20.5	50.7	21.5	20	244	571
33080.W0409	25	50	30.8	57.1	33.8	22.0	50.7	21.5	25	286	415
33080.W0410	25	60	30.8	57.1	33.8	22.0	50.7	21.5	25	286	453

Ball Lock Pins - Single Acting - Grey

self-locking - stainless steel 1.4305 (AISI 303)

Order No.	d_1	l_1	d_2	d_3	d_4	l_2	l_3	l_4	Loc'n hole tol. H11	Shearing resistance, double kN min.	Weight g
33080.W0411	25	70	30.8	57.1	33.8	22.0	50.7	21.5	25	286	490
33080.W0412	25	80	30.8	57.1	33.8	22.0	50.7	21.5	25	286	528
33080.W0413	25	90	30.8	57.1	33.8	22.0	50.7	21.5	25	286	565
33080.W0414	25	100	30.8	57.1	33.8	22.0	50.7	21.5	25	286	603
33080.W0415	25	110	30.8	57.1	33.8	22.0	50.7	21.5	25	286	640
33080.W0416	25	120	30.8	57.1	33.8	22.0	50.7	21.5	25	286	690
33080.W0417	25	130	30.8	57.1	33.8	22.0	50.7	21.5	25	286	715
33080.W0418	25	140	30.8	57.1	33.8	22.0	50.7	21.5	25	286	753
33080.W0419	25	150	30.8	57.1	33.8	22.0	50.7	21.5	25	286	790

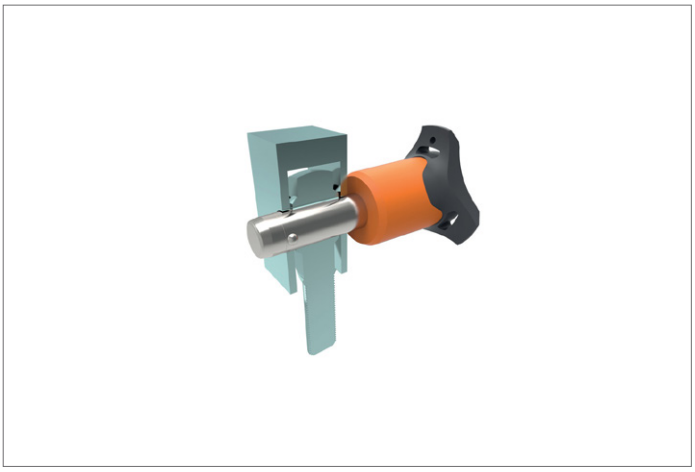

Wixroyd Ball Lock Pins

applications

Sound Rigging Systems

Ball lock pins on a sound rigging system. Offering secure fixing with high shear forces and easy fitting for operators at heights.

In addition full black powder coating of grip and actuation button eliminates glare from other stage lighting.

Gym Equipment

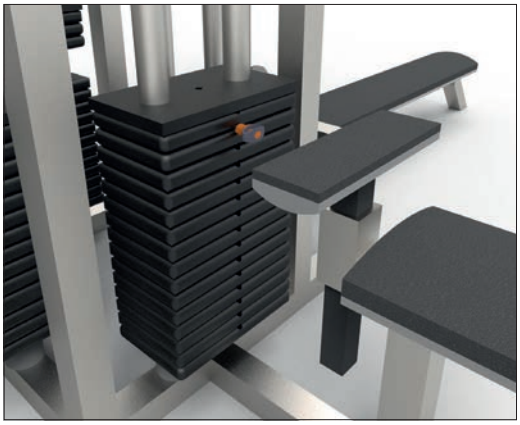

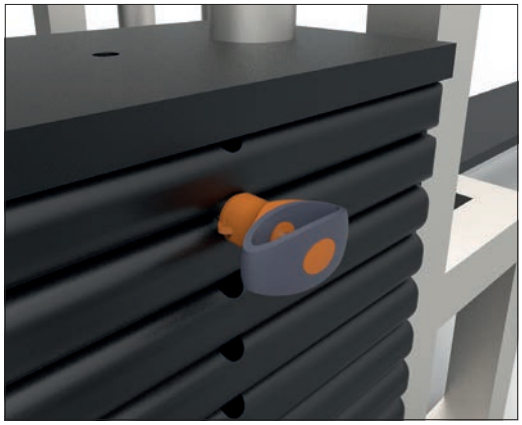

Scientific and Medical

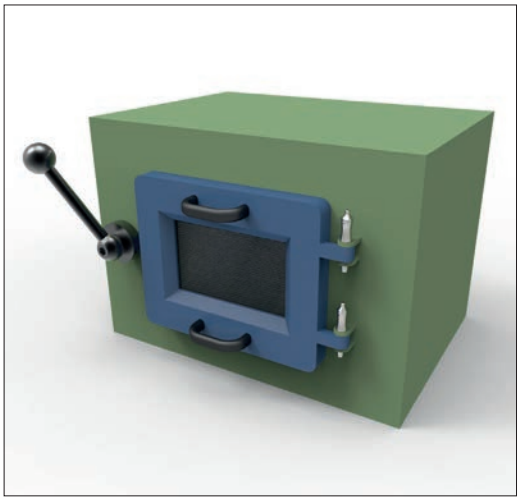

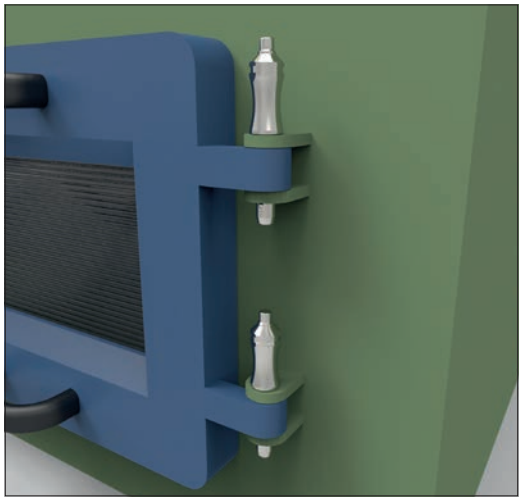

ov-W33060.BK-A-TQR1706-W33250-A-TLA1066-a-Inh - Updated - 27-10-2022

Pin Material

1.4305 (AISI 303) - shear force approx. 60% of higher material version 1.4542

1.4542 (AISI 630) - identified by the ridge on the pin

CRES 17-4PH (AMS 5643) aviation standard

Handle Style

Plastic tri-star

T-handled, metal

L-handled, metal

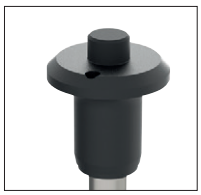

Mushroom, metal

Single piece metal, contoured

Special plastic self-spring

Adjustable grip length, plastic

Key ring

Safety, metal

Mushroom Type B aviation

Type R aviation

Lanyards and Locating Bushes

Stainless wire - (coated) - 2 x key ring

Stainless wire - Key ring and fixing loop

Plastic - 2 x cable tie

Steel wire - (coated) - 2 x key ring

Stainless bead chain - 2 x key ring

Locating bushes

Actuation

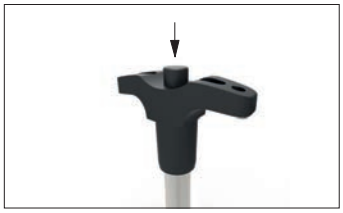

Press = unlock
Release = lock
(standard)

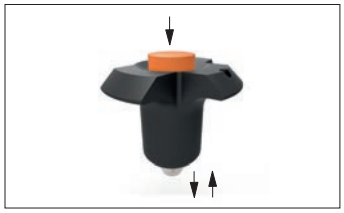

Press = unlock and position
Release = lock and simultaneous clamp

Simple spring loaded balls "pullout pin"

Important Note

Important Note: Ball lock pins are not suited to lifting applications!

For quick release lifting pins, see part 33400.

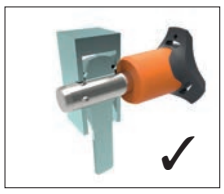

Shear force

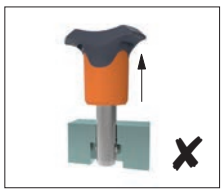

Lifting force

Special Variations

Variations on our standard designs are possible, please contact our sales team for technical assistance. Quick production on specials can be as little as 3 weeks.

ov-W33060.BK-A-TQR1706-W33250-A-TLA1066-b-rnh - Updated - 27-10-2022

Wixroyd Ball Lock Pins

Applications

- Positioning.
- Lifting.
- Locking.
- Indexing.
- Joining.

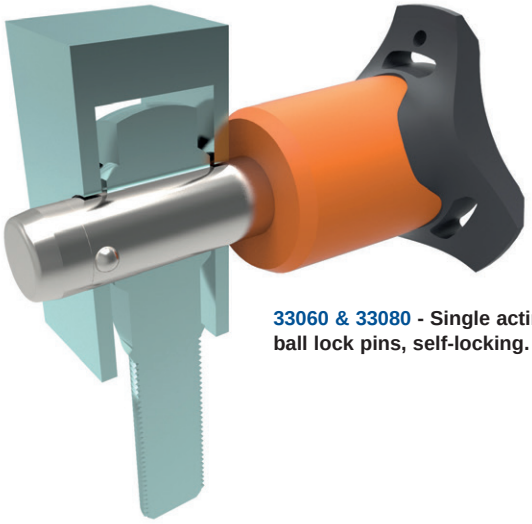

33060 & 33080 - Single acting ball lock pins, self-locking.

33194 - Single acting ball lock pins, self locking, simple finish.

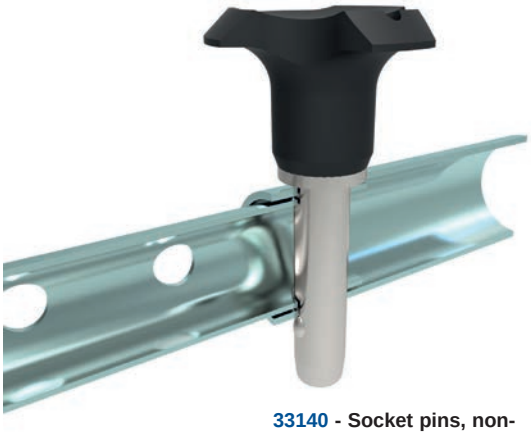

33140 - Socket pins, non-locking, spring loaded balls.

33100 - Single acting ball lock pin, self locking.

33180 - Clamping pins, with span compensation, self-locking.

33220 - Ball lock pins, single acting - L-handle

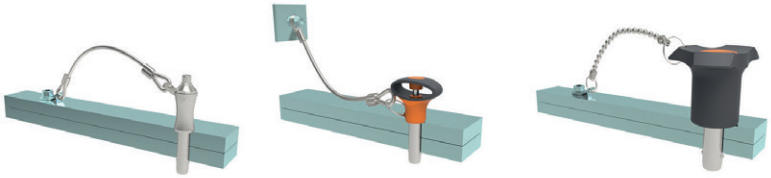

33250 & 33270 - Lanyards.

Wixroyd AN ESSENTRA COMPANY

wixroyd.com

ov-W33060.BK-A-TQR1706-W33250-A-TLA1066-c-Inh - Updated - 27-10-2022