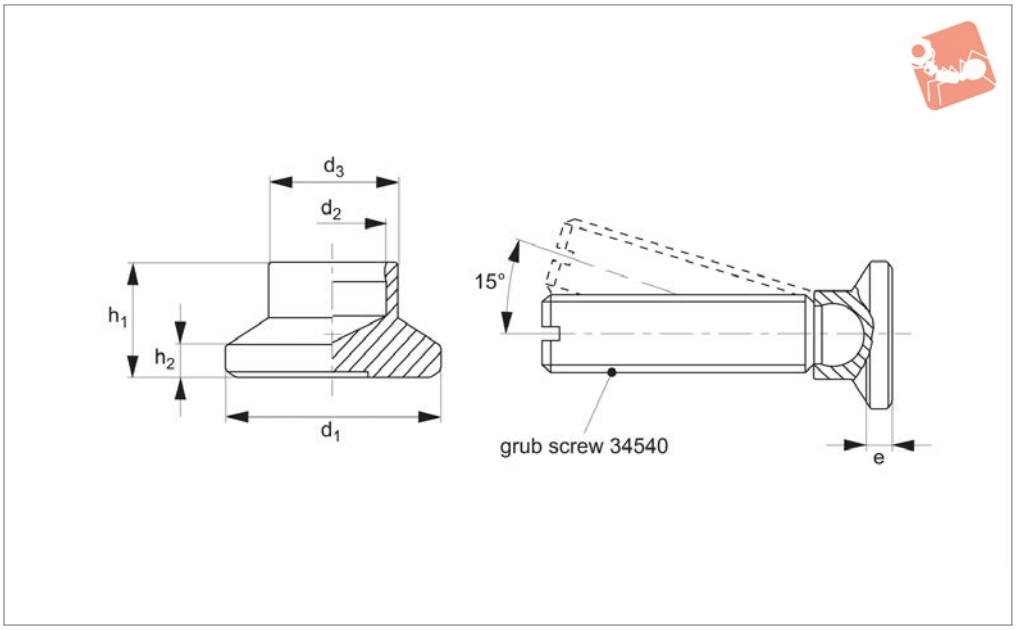

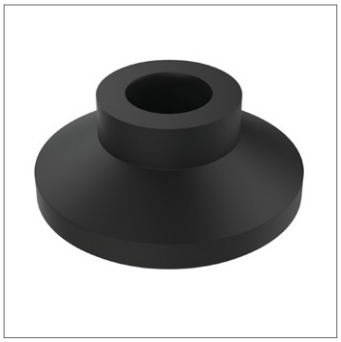

34530

Material
Thermoplastic (POM) black, matte.

Technical Notes
Can be used with grub screw no. 34540<X\ 34540#26>.

Order No.	d_1	d_2	d_3	e ≈	h_1	h_2	Load capacity for static load kN max.	For grub screws 34540	Weight g
34530.W0014	15	4.5	8.6	3.6	7.6	2.5	3.5	M 6	1.0
34530.W0015	15	6.1	8.6	2.5	7.6	2.5	3.5	M 8	1.0
34530.W0017	18	6.1	10.8	4.2	9.2	2.5	3.5	M 8	1.8
34530.W0018	18	7.8	10.8	3.4	9.2	2.5	3.5	M10	2.0
34530.W0019	21	6.1	12.8	5.0	10.0	3.0	3.5	M 8	3.0
34530.W0020	21	7.8	12.8	4.3	10.0	3.0	3.5	M10	2.6
34530.W0021	21	9.4	12.8	3.4	10.0	3.0	3.5	M12	3.0
34530.W0023	25	6.1	13.0	5.5	10.5	3.0	3.5	M 8	4.0
34530.W0024	25	7.8	13.0	4.6	10.5	3.0	3.5	M10	3.6
34530.W0025	25	9.4	13.0	3.6	10.5	3.0	3.5	M12	3.4
34530.W0032	32	6.1	14.0	6.0	11.0	3.0	3.5	M 8	5.0
34530.W0033	32	7.8	14.0	5.0	11.0	3.0	3.5	M10	5.0
34530.W0034	32	9.4	14.0	4.2	11.0	3.0	3.5	M12	5.0
34530.W0040	40	6.1	16.0	8.0	13.0	4.0	3.5	M 8	11.0
34530.W0041	40	7.8	16.0	7.0	13.0	4.0	3.5	M10	10.0
34530.W0042	40	9.4	16.0	6.2	13.0	4.0	3.5	M12	10.0
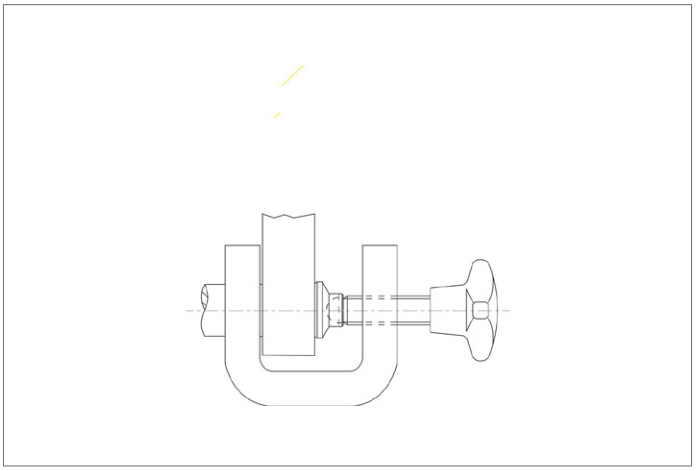
Thrust Pads
plastic