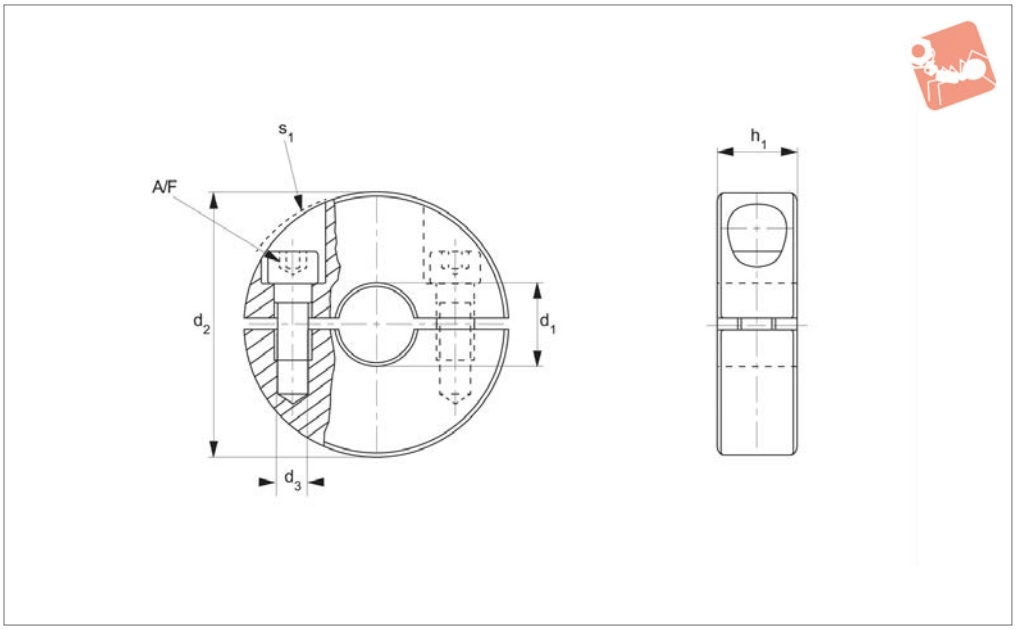

38624

Material

Steel type:
Steel, black, steam oxidized.
Stainless steel type:
Stainless steel (AISI 316, 1.4404).

Technical Notes

Divided set collars with strong clamping force. Universal applicability: e.g as a fixed stop. The stainless steel type is extremely resistant to corrosive environments. Also available in slotted finish - see part no. 38620.
Dimension s_1 indicates the max. stroke or movement of d_2 during tightening of the collar.

Order No.	Material	d_1 tol. H10	d_2	d_3	h_1	A/F	Stroke s_1 max.	Weight g
38624.W0206	Steel	6	20	M 3	9	3	1.2	18
38624.W0208	Steel	8	22	M 3	9	3	1.0	20
38624.W0210	Steel	10	26	M 4	11	3	1.6	20
38624.W0212	Steel	12	30	M 4	11	3	0.7	39
38624.W0214	Steel	14	32	M 4	11	3	0.7	43
38624.W0215	Steel	15	36	M 5	13	4	1.4	65
38624.W0216	Steel	16	36	M 5	13	4	1.4	64
38624.W0218	Steel	18	42	M 5	15	4	0.6	103
38624.W0220	Steel	20	42	M 5	15	4	0.6	100
38624.W0222	Steel	22	48	M 5	15	4	0.0	135
38624.W0225	Steel	25	48	M 5	15	4	0.0	125
38624.W0228	Steel	28	55	M 6	15	5	0.5	165
38624.W0230	Steel	30	55	M 6	15	5	0.5	156
38624.W0232	Steel	32	60	M 6	15	5	0.4	187
38624.W0235	Steel	35	60	M 6	15	5	0.4	170
38624.W0240	Steel	40	65	M 6	15	5	0.5	189
38624.W0306	Stainless	6	20	M 3	9	3	1.2	18
38624.W0308	Stainless	8	22	M 3	9	3	1.0	20
38624.W0310	Stainless	10	26	M 4	11	3	1.6	20
38624.W0312	Stainless	12	30	M 4	11	3	0.7	39
38624.W0314	Stainless	14	32	M 4	11	3	0.7	43
38624.W0315	Stainless	15	36	M 5	13	4	1.4	65
38624.W0316	Stainless	16	36	M 5	13	4	1.4	64
38624.W0318	Stainless	18	42	M 5	15	4	0.6	103
38624.W0320	Stainless	20	42	M 5	15	4	0.6	100
38624.W0322	Stainless	22	48	M 5	15	4	0.0	135
38624.W0325	Stainless	25	48	M 5	15	4	0.0	125
38624.W0328	Stainless	28	55	M 6	15	5	0.5	165
38624.W0330	Stainless	30	55	M 6	15	5	0.5	156
38624.W0332	Stainless	32	60	M 6	15	5	0.4	187

Set Collars

two piece - divided

Order No.	Material	d_1 tol. H10	d_2	d_3	h_1	A/F	Stroke s_1 max.	Weight g
38624.W0335	Stainless	35	60	M 6	15	5	0.4	170
38624.W0340	Stainless	40	65	M 6	15	5	0.5	189