Pull Handles - Oval

aluminium

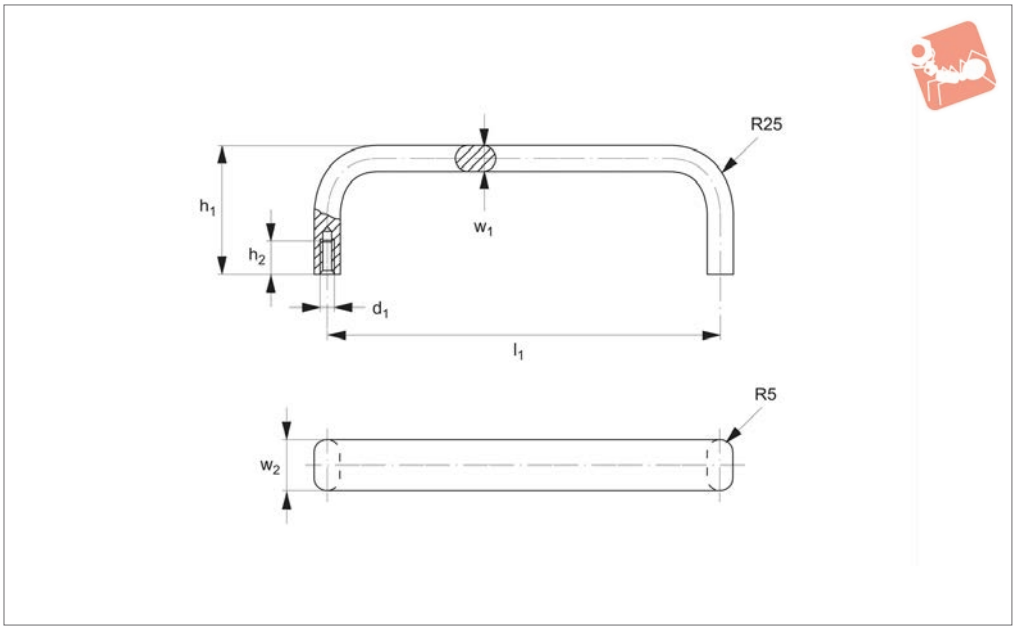

78030

Material
Flat-oval profiled aluminium AlMgSi 0.5. Finish: ground and anodized with a matte finish in natural or black colour.

Technical Notes
Minimum stress resistance 500N. Suitable for engineering, instrument and apparatus building.

Order No.	Colour	l_1	w_1	h_1	d_1	h_2	w_2
78030.W0120-1	Natural	120	10	45	5	10	20
78030.W0120-4	Black	120	10	45	5	10	20
78030.W0140-1	Natural	140	10	45	5	10	20
78030.W0140-4	Black	140	10	45	5	10	20
78030.W0180-1	Natural	180	10	45	5	10	20
78030.W0180-4	Black	180	10	45	5	10	20
78030.W0200-1	Natural	200	10	45	5	10	20
78030.W0200-4	Black	200	10	45	5	10	20
78030.W0350-1	Natural	350	10	45	6	12	20
78030.W0350-4	Black	350	10	45	6	12	20