Triangular Socket Wrench

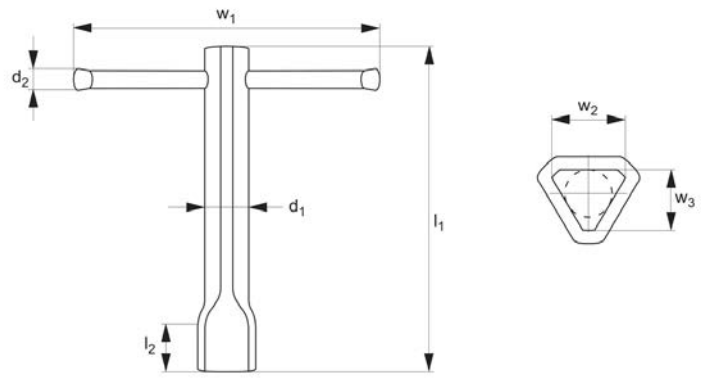

91990

Material
Steel, zinc plated.

Technical Notes
For use with triangular screws to DIN 22424, and triangular nuts to DIN 22425.

Order No.	For thread	d_1	d_2	l_1	l_2	w_1	w_2	w_3	Weight g
91990.W0004	M 4	9	4	90	4	50	7.7	6.8	20
91990.W0005	M 5	12	6	100	5	65	9.4	8.3	30
91990.W0006	M 6	14	6	115	6	80	11.4	10.1	60
91990.W0008	M 8	16	8	125	8	100	13.7	12.1	80
91990.W0010	M10	20	8	140	10	125	17.1	15.1	160
91990.W0012	M12	20	10	160	12	160	18.9	16.6	240
91990.W0016	M16	25	12	180	16	200	23.5	20.6	400