Non-Rebound Mallets - Complete

steel housing and handle

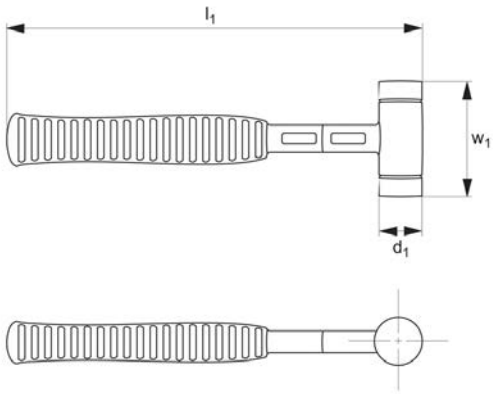

98310

Material

Housing: steel, polyurethane coating.
Handle: steel, ergonomic rubber grip.

Technical Notes

Shot filled housing results in a non-rebound action and assists in full transmission of impact force.

Tips

Ideal for uses including: automobile assembly and repair work, positioning of workpieces in vices, sheet-metal working, dent removal.

Order No.	Ø d_1	w_1	l_1	Weight g
98310.W0040	40	110	300	640
98310.W0050	50	115	310	900
98310.W0060	60	120	315	1300

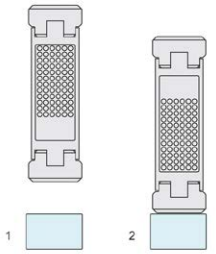

diagram showing the shot-filled housing of the non-rebound mallet

Application Selection Chart

Application selection chart

	TPE-soft Soft	Com-posite rubber Med	TPE-mid Med	Plastic Hard	Super plastic Med	Nylon Hard	Alu Hard	Copper Hard	98301 wood	98301 steel	98301 fibre	98310	98321	98401	98330
	Range of inserts for Simplex mallets 98001 to 98224								Range of mallet handle types						
Construction applications															
Paving		•	•		•										
Floor tiling	•		•												
Curbstone setting / Masonry work		•			•										
Concrete form set-up		•		•											
Scaffold construction		•		•	•	•									
Tent and hall construction					•	•			•						
Gardening and landscaping		•			•										
Home construction		•	•												
Metal-working industry applications															
Automotive assembly and repair work				•	•	•	•	•	•	•	•	•	•	•	•
Positioning of workpieces in a vice									•	•	•	•	•		
Straightening work							•		•	•	•	•			
Joining of workpieces						•			•	•	•	•		•	•
Repair and maintenance work				•				•	•	•	•	•		•	•
Car body work				•	•		•		•	•	•	•	•		•
Sheet metal working				•	•	•			•	•	•	•	•		•
Dent removal	•	•		•	•	•						•	•		•
Housing assembly					•	•			•	•	•		•	•	•
Mould construction						•	•								•
Assembly of sharp-edged workpieces					•	•			•	•	•				•
Wood-working applications															
Furniture assembly	•		•										•		•
Window and door construction	•		•										•		•
Prefabricated house construction		•													
Joiner's work	•		•										•		•
Carpenter's work		•													
Floor parqueting / laminating													•		
Agriculture and forestry applications															
Fence construction		•			•				•						
Wood splitting with wedge					•				•						
Maintenance and repair work on agricultural machinery						•			•						•

ov-W98001-A-T-W98501-A-T-a-lnh-Updated -27-10-2022