Split Maul Simplex Mallet - Complete

cast iron housing - wooden handle

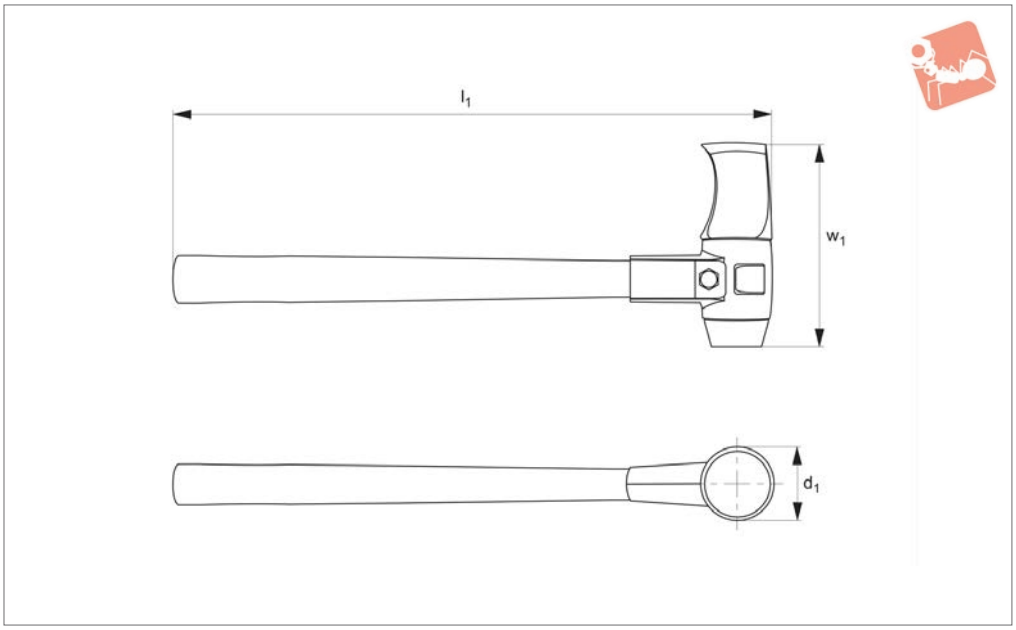

98381

Material

Housing: malleable cast iron.
Handle: hickory wood.
Inserts: superplastic, white. Medium hard.
Splitting Maul: carbon steel, drop-forged and hardened, with turned nose.

Technical Notes

Two tools in one; splitting maul for wood harvesting and soft face mallet for hammering stakes and fencing posts.

Tips

Simplex maul mallets are a flexible modular system with replaceble handle, housing and inserts. Suitable replacement items for Simplex maul mallet 98381 are;
- handle no. 98383
- housing no. 98382
- inserts no. 98384

Important Notes

Do not strike steel with the splitting insert - can result in splintering and injury. Use only original Wixroyd Simplex Mallet parts when replacing handle or inserts.

Order No.	Inserts	Head d_1	w_1	l_1	Weight g
98381.W0065	Splitting Maul/Superplastic	60	65	900	4100

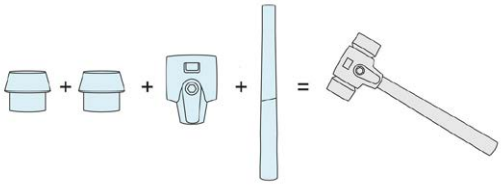

modular splitting maul/mallet system allows this product to be reverted to a traditional mallet if required

Application Selection Chart

Application selection chart

	TPE-soft Soft	Com-posite rubber Med	TPE-mid Med	Plastic Hard	Super plastic Med	Nylon Hard	Alu Hard	Copper Hard	98301 wood	98301 steel	98301 fibre	98310	98321	98401	98330
	Range of inserts for Simplex mallets 98001 to 98224								Range of mallet handle types						
Construction applications															
Paving		•	•		•										
Floor tiling	•		•												
Curbstone setting / Masonry work		•			•										
Concrete form set-up		•		•											
Scaffold construction		•		•	•	•									
Tent and hall construction					•	•			•						
Gardening and landscaping		•			•										
Home construction		•	•												
Metal-working industry applications															
Automotive assembly and repair work				•	•	•	•	•	•	•	•	•	•	•	•
Positioning of workpieces in a vice									•	•	•	•	•		
Straightening work							•		•	•	•	•			
Joining of workpieces						•			•	•	•	•		•	•
Repair and maintenance work				•				•	•	•	•	•		•	•
Car body work				•	•		•		•	•	•	•	•		•
Sheet metal working				•	•	•			•	•	•	•	•		•
Dent removal	•	•		•	•	•						•	•		•
Housing assembly					•	•			•	•	•		•	•	•
Mould construction						•	•								•
Assembly of sharp-edged workpieces					•	•			•	•	•				•
Wood-working applications															
Furniture assembly	•		•										•		•
Window and door construction	•		•										•		•
Prefabricated house construction		•													
Joiner's work	•		•										•		•
Carpenter's work		•													
Floor parqueting / laminating													•		
Agriculture and forestry applications															
Fence construction		•			•				•						
Wood splitting with wedge					•				•						
Maintenance and repair work on agricultural machinery						•			•						•

ov-W98001-A-T-W98501-A-T-a-lnh-Updated -27-10-2022