Cam Latches - with Rod Control

extended cover - fixed grip - 2 off 25 x 50 cut out

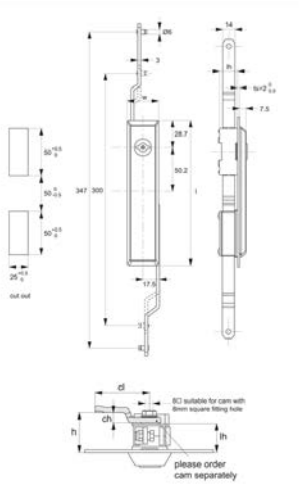

A4260

Material

Body: polyamide. Unique integral polyurethane gasket, to achieve IP54 rating.
Rod control mechanism: die cast zinc.
Driver Insert: die cast zinc, chrome plated.
Not supplied: Key: order separately.

Technical Notes

Order cam and key separately.

Cams: see suitable cam A0203, A0224 and A0240. Select „without projection" cam type.
Dimensions ch and cl relate to cam. Use formula to calculate ch (required cam off-set), and refer to cam selection chart;
ch = h - lh where;
ch = required cam off-set/height.

h = grip length (distance between inside of latch face and front of cam).
lh = body length of cam latch/lock to be used (see product table below).
Keys: see A0102.
Rods & Guides: to achieve 3-point latching - A0303, A0321, A0325.

Order No.	Insert driver	l	w	lh
A4260.AW0010	3mm Double Bit	157.4	32.4	22