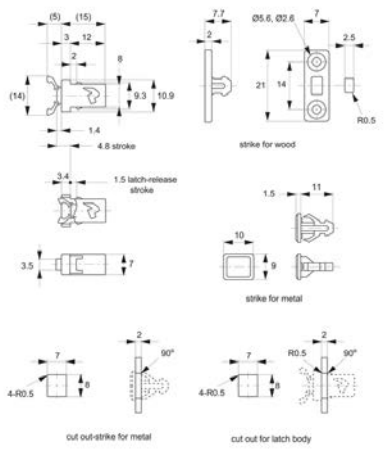

E3000

Material
Body: polyacetal.
Strike: polyamide.

Technical Notes
Strikes ordered separately. Screws not included.
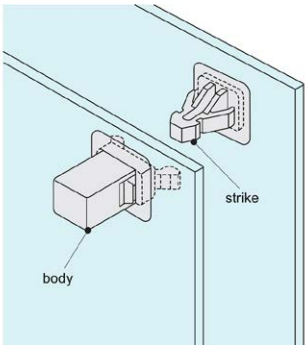
Order No.	Type	Retaining force kgf	Weight g
E3000.AC0020	Latch	1.2	0.7
E3000.AC0022	Strike for Wood	-	0.2
E3000.AC0024	Strike for Metal	-	0.2