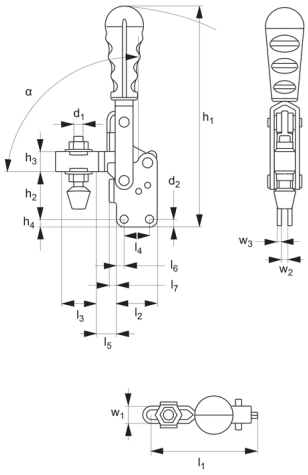

EC602

Material
Body: steel, zinc plated.
Rivets: stainless steel.
Bushes: case hardened and greased.
Handle: plastic, red, oil resistant.

Supplied complete with clamping screw (with rubber pad).

Technical Notes
Opening angle (symbola/symbolsymbola/symbol*) can be changed by pressing in a stop pin on the clamp body.

Order No.	Size	Holding force kN	d_1	d_2	h_1	h_2	h_3	Weight g
EC602-2	2	1.1	M 6	5.2	122	28.5	11.0	160
EC602-3	3	1.7	M 8	7.1	190	40.4	17.5	380
EC602-4	4	2.8	M10	8.3	240	54.5	22.0	600
EC602-5	5	3.6	M12	8.7	240	57.4	22.5	1100

Order No.	h_4	l_1	l_2	l_3	l_4	l_5	l_6	l_7	w_1	w_2	w_3	α/α*
EC602-2	5.5	71.2	27	21.7	12.7	8.3	7	6.7	6.2	6	3	93°
EC602-3	7.5	90.2	35	29.2	19.0	18.8	8	5.5	8.9	6	3	91°
EC602-4	9.5	142.0	50	62.0	32.0	12.3	9	10.0	10.6	8	4	90°/115°
EC602-5	9.5	179.0	51	81.4	31.8	20.0	10	12.2	13.4	10	5	101°/129°