Surface Mount - Leaf Hinges

screw mount - aluminium - clean room

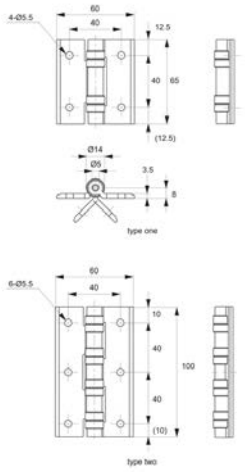

S0600

Material

Body: aluminium.
Spacer: polyacetal.
Pin: stainless steel, AISI 304.

Technical Notes

Due to unique spacers, hinge generates no friction powder and is ideal for semiconductor rooms, clean rooms, medical and food processing applications.

Order No.	Type	Load/pair kg max.	Weight g
S0600.AC0065	Type one	8	60
S0600.AC0100	Type two	13	100

Concealed hinges

For added security or a sleek enclosure design, concealed hinges offer the solution with mounting discreetly hidden away from view to avoid tampering.

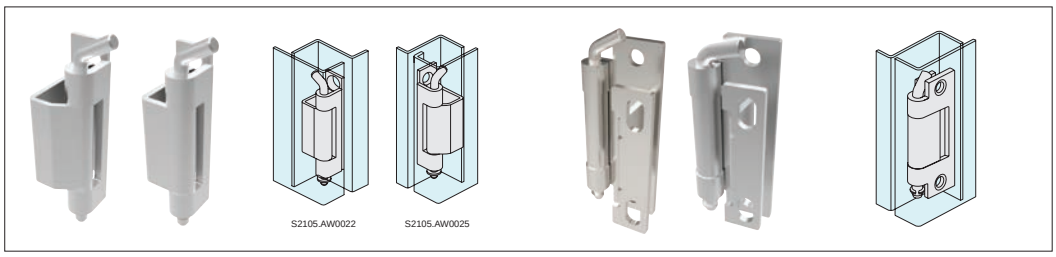

Concealed pivot hinges

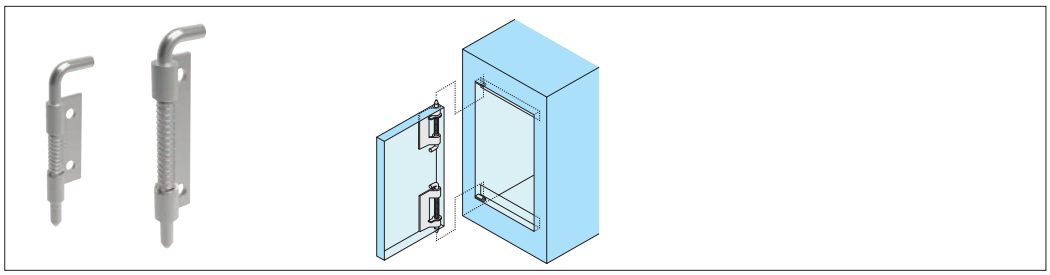

End mount concealed pivot hinges

Door removal hinges

Door removal or lift-off hinges simplify removal of covers and panels to ease access for maintenance and repair, available in a selection of materials.

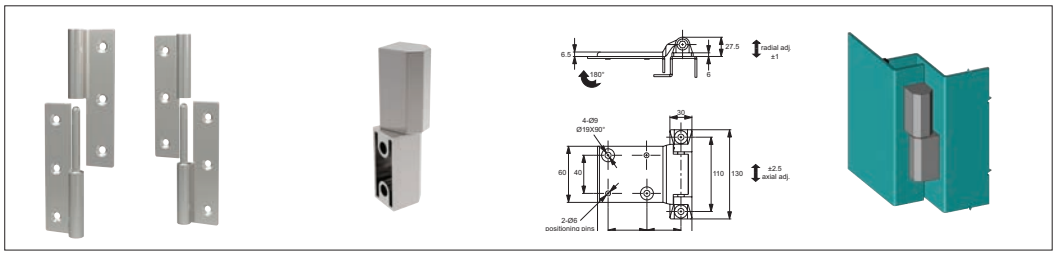

Lift off hinges

Torque and positioning hinges

Torque and positioning hinges offer positive location of panels, screens and displays using constant friction for a firm hold.

Constant torque hinges

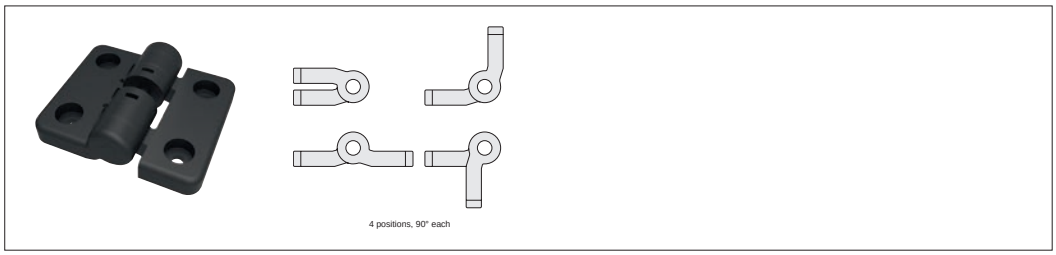

Detent positioning hinges

ov-WS0050-A-T-WS1828-A-T-wide-range-of-solutions-Inh - Updated - 01-11-2022

Left or right type: Which do you need?

Wixroyd have a diverse range of hinges to suit most industrial applications in a wide range of materials and finishes.

Throughout our catalogue we refer to parts as being of a “Left” or “Right” type or hand. Which type you need, is most easily explained as follows;

Orientate your application so that when opened the door/panel comes towards you. With this orientation in mind, look to see on which side of the door/panel the hinges are mounted?

If the hinges are on the left side of the door/panel then you require “Left” type products. If the hinges are on the right side of the door/panel then you require “Right” type products.

The illustration on the right clearly indicates the layout and orientation of the door where a “left” or “right” product is used.

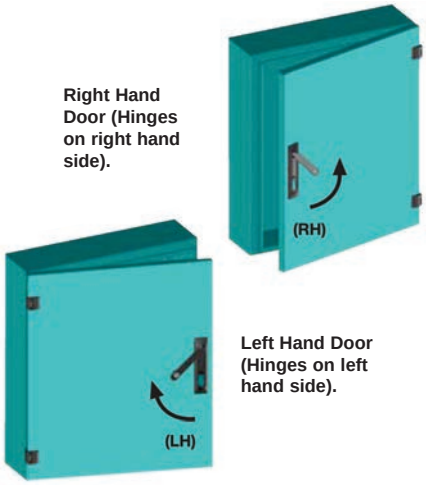

Hinges

External or surface mount hinges have a wide range of application on electrical panels, sheet metal enclosures, generators and heating and venting applications.

External hinges

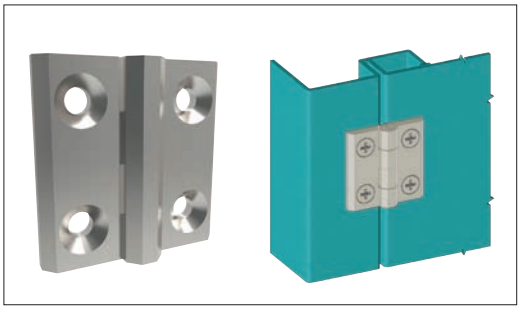

Surface mount hinges

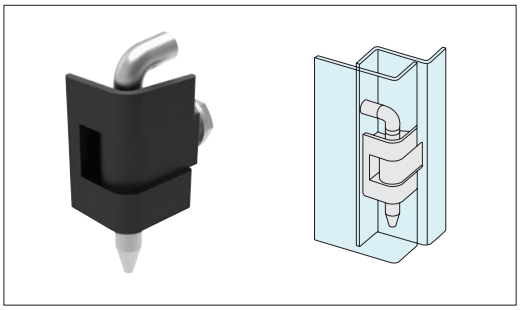

Corner hinges

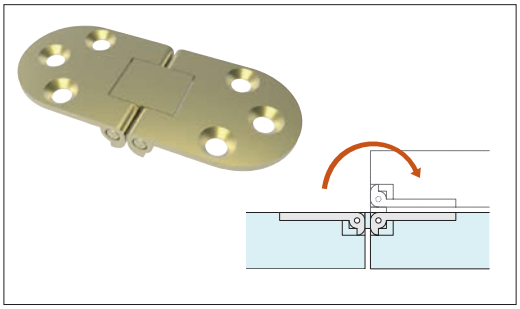

Flush mount hinges

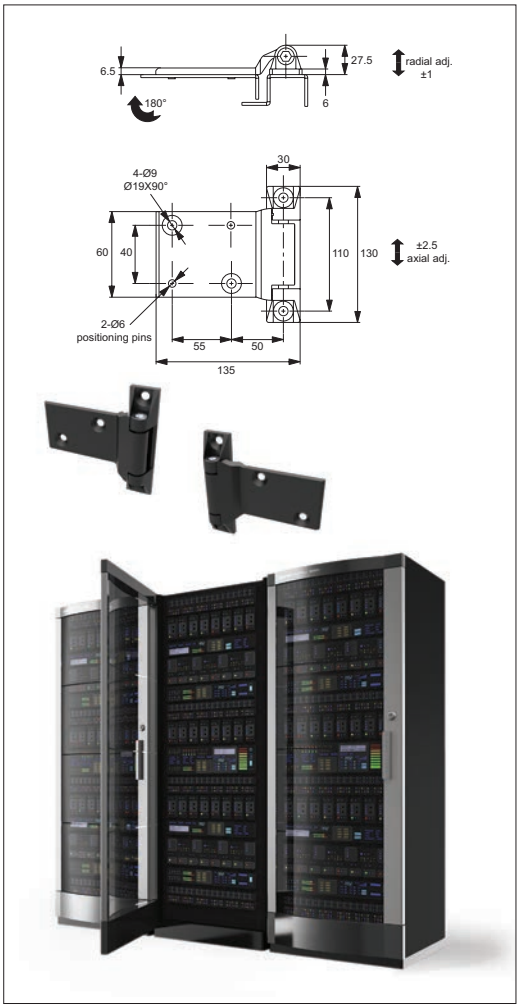

Surface mount hinges