Cam Latches - with Rod Control

cover - fixed grip - 25 x 50 cut out - logo recess

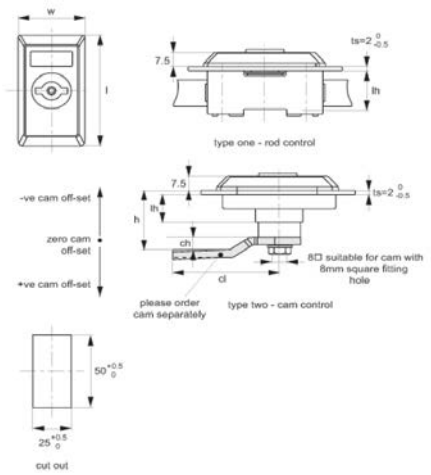

A4221

CAM LATCHES

Material

Panel: black PA.
Insert: die cast zinc, bright chrome-plated
Cam and rod: white zinc plated steel. **Type one:** rod control system.
Type two: cam control.
Not Supplied: CAM nor Key: order separately.

Technical Notes

Order cam and key separately.

Cams: see suitable cam A0203, A0224 and A0240. Select „without projection" cam type.
Dimensions ch and cl relate to cam. Use formula to calculate ch (required cam off-set), and refer to cam selection chart;
ch = h - lh where;
ch = required cam off-set/height.
h = grip length (distance between inside of latch face and front of cam).

lh = body length of cam latch/lock to be used (see product table below).
Keys: see A0102.
Rods & Guides: to achieve 3-point latching - A0303, A0321, A0325.

Tips

Ideal for electrical cabinets & enclosures with max. panel thickness of 2mm.

Order No.	Insert driver	Type	l	w	lh	ts max.
A4221.AW0010	4mm Double Bit	Rod Control	57.5	30	23	2
A4221.AW0020	Triangle 8	Rod Control	57.5	30	23	2
A4221.AW0030	Square 7	Rod Control	57.5	30	23	2
A4221.AW0310	4mm Double Bit	Cam Control	57.5	30	16	2
A4221.AW0320	Triangle 8	Cam Control	57.5	30	16	2
A4221.AW0330	Square 7	Cam Control	57.5	30	16	2
A4221.AW0340	Square 8	Cam Control	57.5	30	16	2

Cam Latches - with Rod Control

extended cover - fixed grip - 2 off 25 x 50 cut out

A4241

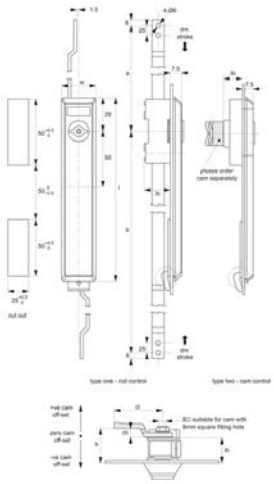

Material

Panel: black PA.
Cam and Rod: steel.
Insert: die cast zinc, chrome-plated
Type one: rod control system.
Type two: cam control.
Not Supplied: Cam nor Key: order separately.

Technical Notes

Order cam and key separately.

Cams: see suitable cam A0203, A0224 and A0240. Select „without projection" cam type.
Dimensions ch and cl relate to cam. Use formula to calculate ch (required cam off-set), and refer to cam selection chart;
ch = h - lh where;
ch = required cam off-set/height.
h = grip length (distance between inside of latch face and front of cam).

lh = body length of cam latch/lock to be used (see product table below).
Keys: see A0102.
Rods & Guides: to achieve 3-point latching - A0303, A0321, A0325.

Tips

Insert quarter turn combines with rod latch system to open or close. Suitable for panel thicknesses of 2mm.

Order No.	Insert driver	Type	l	w	lh
A4241.AW0010	3mm Double Bit	Rod Control	157.5	30	23
A4241.AW0020	Triangle 8	Rod Control	157.5	30	23
A4241.AW0030	Square 7	Rod Control	157.5	30	23
A4241.AW0040	Square 8	Rod Control	157.5	30	23
A4241.AW0310	3mm Double Bit	Cam Control	157.5	30	16
A4241.AW0320	Triangle 8	Cam Control	157.5	30	16
A4241.AW0330	Square 7	Cam Control	157.5	30	16
A4241.AW0340	Square 8	Cam Control	157.5	30	16

Cam Latches - with Rod Control

extended cover - fixed grip - 2 off 25 x 50 cut out

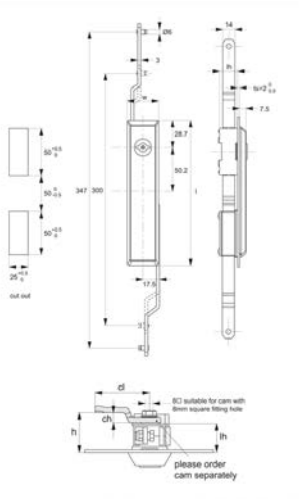

A4260

Material

Body: polyamide. Unique integral polyurethane gasket, to achieve IP54 rating.
Rod control mechanism: die cast zinc.
Driver Insert: die cast zinc, chrome plated.
Not supplied: Key: order separately.

Technical Notes

Order cam and key separately.

Cams: see suitable cam A0203, A0224 and A0240. Select „without projection" cam type.
Dimensions ch and cl relate to cam. Use formula to calculate ch (required cam off-set), and refer to cam selection chart;
ch = h - lh where;
ch = required cam off-set/height.

h = grip length (distance between inside of latch face and front of cam).
lh = body length of cam latch/lock to be used (see product table below).
Keys: see A0102.
Rods & Guides: to achieve 3-point latching - A0303, A0321, A0325.

Order No.	Insert driver	l	w	lh
A4260.AW0010	3mm Double Bit	157.4	32.4	22

Selecting the Correct Cam Latch or Lock

When selecting a Wixroyd Cam Latch for your application, you need to answer these questions:

1. Which installation cut out?
2. Which body style?
3. Which locking key?
4. Which accessories?
5. Which cam type and size?

Step 1: Which installation cut out?

Cut out

All our Flexi-System cam latches use a standard installation cut out 22,2 dia, 20,2 square, for maximum flexibility. We also provide a number of alternative cut out dimensions for legacy/historical installations.

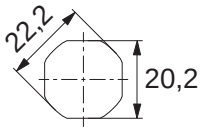

flexi-system cut out

Step 2: Which body style?

Material and finish

Select from our variety of die cast zinc, polyamide plastic and stainless versions.

Die-cast zinc chrome plate

Die-cast zinc black coated

Polyamide black

Stainless steel

Actuation and locking method

Standard insert driver type, cylinder lock or wing handle type.

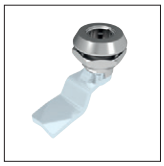

Insert driver

Cylinder lock

Wing handle

Number of latching points in application

Typically single point latching is required, but the Wixroyd Flexi-System also provides multi-point latching (typically 3 point - at lock point, top and bottom of cabinet).

Single point

Two point

Multi-point

Step 3: Which locking key?

Standard insert driver keys

Our range of insert driver cam latches require a simple key to actuate. Refer to part A0102 and A0103 for correct keys.

Cylinder locking

Our cam locks with cylinder locks are supplied with two keys per lock. Available as keyed alike or keyed to differ locks.

Step 4: Which accessories?

- Multi-point latching: use our rod set A0303 to A0325 for suitable rods and rod guides.
- Finger pulls: easily installed with any of our flexi-system cam bodies, finger pull no. A0352 is a simple, cost effective handle for your cabinets.
- Dust Cap: to reduce material ingress.

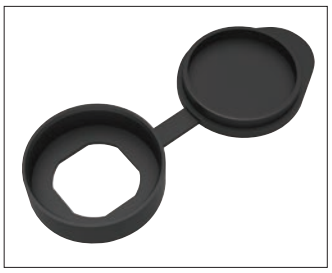

Wixroyd AN ESSENTRA COMPANY
wixroyd.com

ov-WA1004-A-T-WA4260-A-T-selecting-correct-cam-latch-or-lock-a-Inh- Updated -26-10-2022

Miscellaneous Cut out	Actuation Method			Body			Finishes			Cam Type		
	Insert Driver	Cylinder Lock	Manual/Grip	Body length (mm)	Die-Cast Zinc	Polyamide Plastic	Stainless Steel	Chrome Plated	Black Coated	Natural	With Projection	W/O Projection	IP Rating
A1192 - Mini Cam Latch - Wing Handle - Fixed Grip													
			✓	10	✓			✓					
Cams: Supplied - Keys: N/A													
A1506 - Panel Latches - Fixed Grip													
	✓			25		✓			✓				54
Cams: Supplied - Keys: A0102													
A1520 - Cam Lock - Fixed Grip													
	✓			18		✓			✓				
Cams: Supplied - Keys: A0102													
A1546 - Panel Latch - Uncovered													
			✓		✓			✓					
Cams: Supplied - Keys: N/A													
A1561 - Panel Latch - with Cover													
	✓			22,5		✓			✓				
Cams: Supplied - Keys: N/A													
A1701 - Compression Latch - Lever Latch - Flush Trigger													
	✓				✓			✓					
Cams: N/A - Keys: Supplied													
A1707 - Compression Latch - Lever Latch - Raised Trigger													
	✓			19	✓			✓					
Cams: Supplied - Keys: Supplied													
A1751 - Compression Latch - Lever Latch													
			✓		✓			✓					
Cams: N/A - Keys: Supplied													

Miscellaneous Cut out	Actuation Method			Body			Finishes			Cam Type		
	Insert Driver	Cylinder Lock	Manual/Grip	Body length (mm)	Die-Cast Zinc	Polyamide Plastic	Stainless Steel	Chrome Plated	Black Coated	Natural	With Projection	W/O Projection	IP Rating
A4241 - Cam Latch - with Rod Control - Extended Cover													
	✓					✓			✓			✓	40
Cams: A0203, A0224, A0240 - Keys: A0102													
A4260 - Cam Lock - with Rod Control - Wing Handle - Extended Cover													
		✓				✓			✓			✓	54
Cams: A0203, A0224, A0240 - Keys: A0102													
A4221 - Cam Latch - with Rod Control - with Cover													
	✓			Various		✓			✓			✓	
Cams: A0203, A0224 - Keys: A0102													

Selecting the Correct Cam Latch or Lock

With or without "Projection"

Different cam bodies require cams either with or without projection.

Step 5: Which cam type and size?

Wixroyd cams are available in a number of different materials; zinc plated steel, stainless steel (AISI 304) and black plastic.

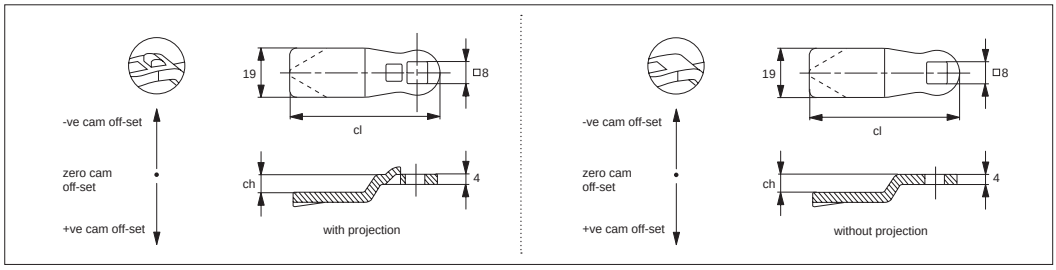

With projection cams prevent turning of the cam over 45°, but is not suited to all cam bodies. For correct projection type please see individual cam body technical pages.

Number of Latching Points

Single point cams are suitable where just single point latching is required. Multi-point cams are for applications requiring 2 or 3 latching points.

Calculation of correct cam off-set

This is the most important aspect of the selection process.

Cam off-set (dimension ch)

To ensure your cam fully and correctly engages with the frame of your door the correct cam off-set must be selected. A cam off-set can be either negative (-ve) or positive (+ve).

Cam length (dimension cl)

This impacts the reach of the cam to door frame and hence impacts positioning of cam body for installation. Cam length is measured from the centre of the cam fixing hole to the cam's leading edge. Most typically cams are 45 mm in length.

Use formula to calculate ch (required cam off-set), and refer to the cam selction chart.

ch = h - lh where;

ch = the required cam off-set/height

h = grip length (distance between inside of latch face and front of cam).

lh = body length of cam latch/lock to be used (see example below)

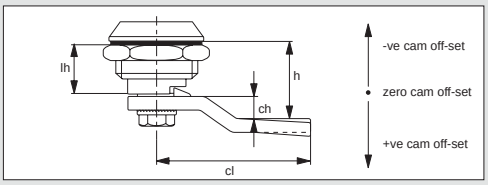

Example of calculation of correct cam off-set

Example one

Cam body A1003.AW0010 has been selected for the application. If we refer to the data sheet for this part, suitable cams are parts A0203, A0210 or A0240 - "without projection".

Known application information: h = 26 lh = 18

Therefore; ch = 26 - 18 = +8

Cam off set of +8 is required

Using the data tables for cams A0203, A0210, and A0240 we can select the following cams without projection with an off set of + 8; A0203.AW5408 (steel), A0210.AW0428 (stainless) or A0240.AW0108 (three point cam).

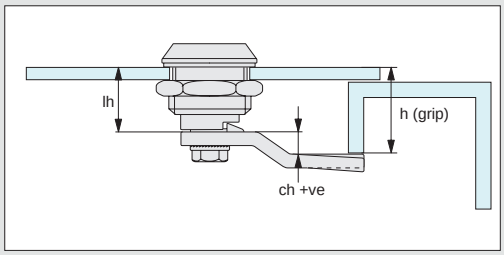

Example two

Cam body A1003.AW0010 has been selected for the application. If we refer to the data sheet for this part, suitable cams are parts A0203, A0210 or A0240 - "without projection".

Known application information: h = 14 lh = 18

Therefore; ch = 14 - 18 = - 4

The required cam off set is negative, - 4 as the application's door frame is effectively shorter/lower than the length of the cam body

Using the data tables for cams A0203, A0210 and A0240 we can select the following cam without projection with an off set of - 4; A0203. AW6404 (steel).

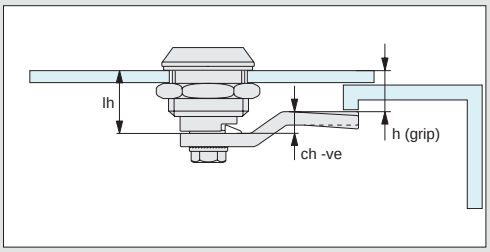

Wixroyd AN ESSENTRA COMPANY
wixroyd.com

ov-WA1004-A-T-WA4260-A-T-selecting-correct-cam-latch-or-lock-b-lnh- Updated -26-10-2022

Suitable With Projection Cams

Compatible cam no.	A0261	A0203	A0210	A0240
Cam fitting hole	6 x 6 square 6□	8 x 8 square 8□	8 x 8 square 8□	8 x 8 square 8□
Cam latch / lock no.	A1261 / A1281 / A2390	A2503 / A2504 A2523 / A2528	A2503 / A2504 A2523 / A2528	A2503 / A2504 A2523 / A2528

Suitable Without Projection Cams Table 1

Compatible cam no.	A0203	A0210	A0240	A0243
Cam fitting hole	8 x 8 square 8□	8 x 8 square 8□	8 x 8 square 8□	8 x 8 square 8□
Cam latch / lock no.	A1003 / A1021 / A1103 A1161 / A1168 / A1181 A1203 / A1210 / A1251 A1601 / A1620 / A1801 A2001 / A2203 / A2326 A2333 / A2392 / A2526 A4221 / A4241 / A4260 B1082 / B1086 / B1088 B1091 / B1092 / B1180 B1281 / B1285 / B1380 B1450 / B2091 / B2181	A1003 / A1021 / A1103 A1161 / A1168 / A1181 A1203 / A1210 / A1251 A1601 / A1620 / A1801 A2001 / A2203 / A2326 A2333 / A2392 / A2526 A4221 / A4241 / A4260 B1082 / B1086 / B1088 B1091 / B1092 / B1180 B1281 / B1285 / B1380 B1450 / B2091 / B2181	A1003 / A1021 / A1103 A1161 / A1168 / A1181 A1203 / A1210 / A1251 A1601 / A1620 / A1801 A2001 / A2203 / A2326 A2333 / A2392 / A2526 A4221 / A4241 / A4260 B1082 / B1086 / B1088 B1091 / B1092 / B1180 B1281 / B1285 / B1380 B1450 / B2091 / B2181	A1003 / A1021 / A1103 A1161 / A1168 / A1181 A1203 / A1210 / A1251 A1601 / A1620 / A1801 A2001 / A2203 / A2326 A2333 / A2392 / A2526 A4221 / A4241 / A4260 B1082 / B1086 / B1088 B1091 / B1092 / B1180 B1281 / B1285 / B1380 B1450 / B2091 / B2181

Suitable Without Projection Cams Table 2

Compatible cam no.	A0250	A0234	A0215	A0231	A0233
Cam fitting hole	5 x 5 square 5□	6,3 dia. x 4,9 4,9 Ø6,3	7 x 7 square 7□	8 x 10 dia. 8 Ø10	8 x 10 dia. 8 Ø10
Cam latch / lock no.	A4600 / A4620	A1661 / A1667	B2082 / B2084 / B2086 B2088 / B2285 / B2380	A1603 / A1611 A1630 / A1810	A1603 / A1611 A1630 / A1810

Calculation of correct cam off-set

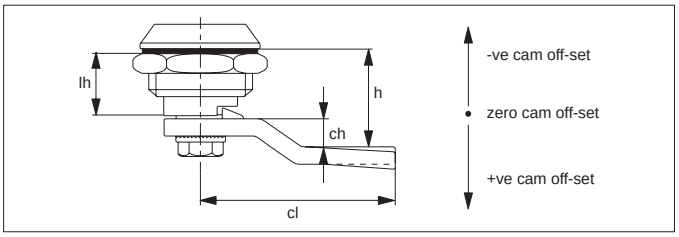

Cam Off-Set (dimension ch)

To ensure your cam fully and correctly engages with the frame of your door the correct cam off-set must be selected. A cam off-set can be either negative (-ve) or positive (+ve).

Cam Length (dimension cl)

Impacts reach of the cam to door frame and hence impacts positioning of cam body for installation. Cam length or reach is measured from the centre of the cam fixing hole to the cam's leading edge. Refer to individual cam body datasheets.

Cam off-set

Use the formula to calculate your correct cam off-set:

ch = h - lh

ch = the required cam off-set.

h = distance between inside of lock face and front of cam (also referred to as "grip length").

lh = length of cam body to be used (refer to individual cam body data sheets).

ov-WA0203-A-TCC0020-WA0261-A-TCC0050-cam-latches-locks-swing-handles-selection-chart-rnh- Updated -26-10-2022

Flexi-system cut out

Our flexi-system is based on a standard installation cut out 22,2 Ø and 20,2 sq.

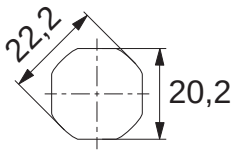

Option 1: Installation when fully assembled

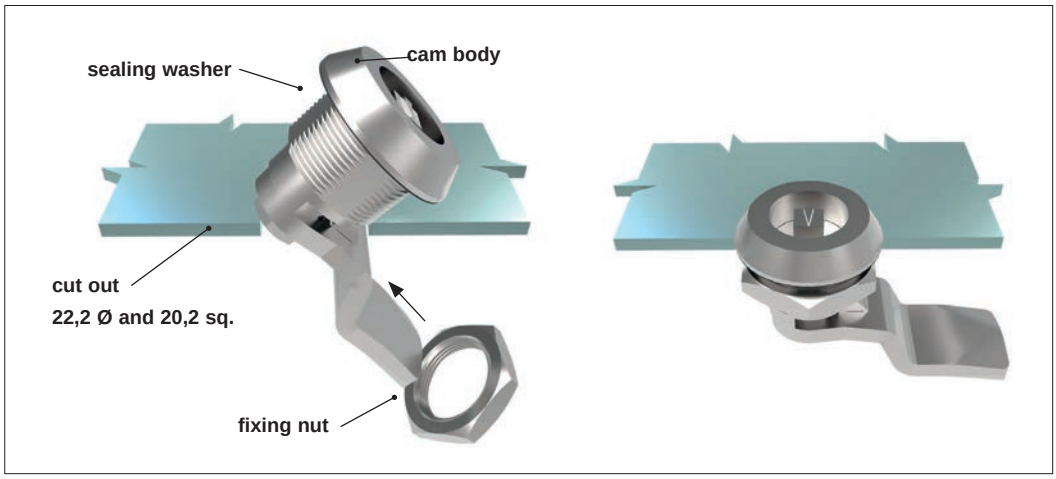

When the cam latch grip (h) is 9mm or more this method is possible:-

1. With the cam body and cam fully assembled, attach the sealing washer to cam body.
2. Tilt the latch 45° and pass it, cam first, through the installation cut out in the panel.
3. When in place attach the fixing nut to the cam body to secure. Tighten to 10 Nm max.

Option 2: Installation unassembled

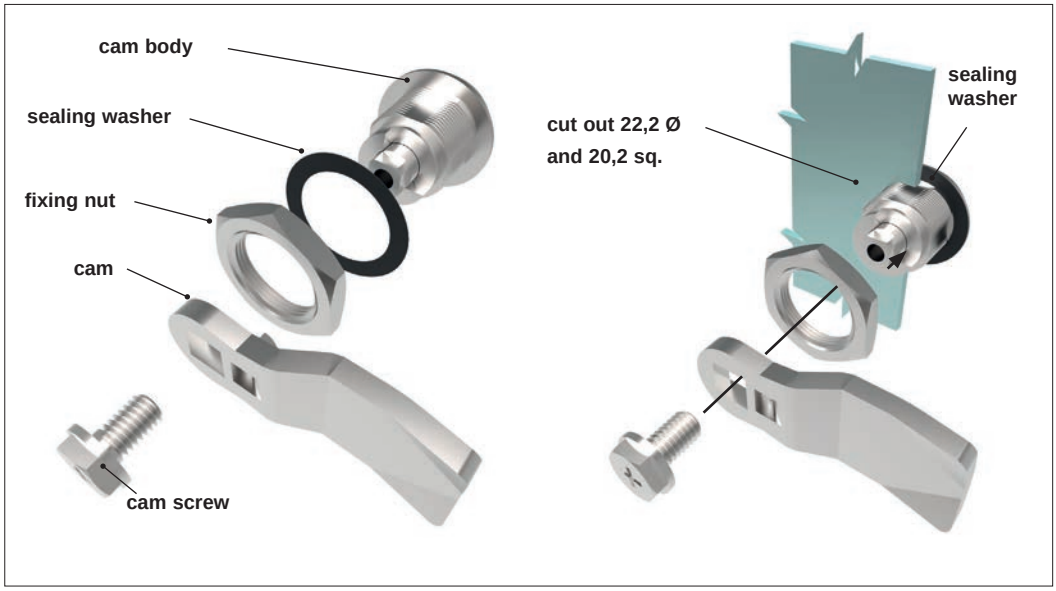

When the cam latch grip (h) is less than 9mm this method is suitable:-

1. Prior to commencing ensure that the cam body, cam, cam screw, fixing nut and sealing washer are completely unassembled.
2. Attach the sealing washer to the cam body and pass through installation cut out in panel.
3. Attach the fixing nut to the cam body to secure. Tighten to 10 Nm max.
4. Attach the cam to the cam body. Once you have ensured that the cam has the correct orientation toward the panel frame, secure the cam screw and tighten to 4 Nm.

ov-WA1003-A-TC0400-WA4260-A-T-cam-latch-installation-Inh- Updated -26-10-2022